Printed from JeppView for Windows 5.3.0.0 on 07 Jan 2024; Terminal chart data cycle 01-2024; Notice: After 18 Jan 2024, 0000Z, this chart may no longer be valid

HECA/CAI
CAIRO INTL

JEPPESEN
4 AUG 23 (11-1) .Eff.10.Aug.

CAIRO, EGYPT
ILS or LOC Rwy 05L

BRIEFING STRIP ™

D-ATIS	CAIRO Approach (R)	CAIRO Tower	Ground South	Ground North
122.6	119.050	118.1	120.4	121.9

LOC IZFL	Final Apch Crs	D7.2 IZFL	ILS DA(H)	Apt Elev 467'
110.9	044^	2500' (2310')	Refer to Minimums	Rwy 190'

MISSED APCH: Turn LEFT onto 319^ climbing to 2500', then turn RIGHT to VOR and hold at 4000', or as directed.

Alt Set: hPa | Rwy Elev: 7 hPa | Trans level: FL060 | Trans alt: 4500'

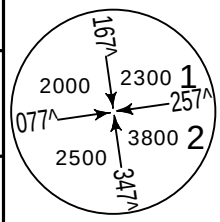

MSA ARP

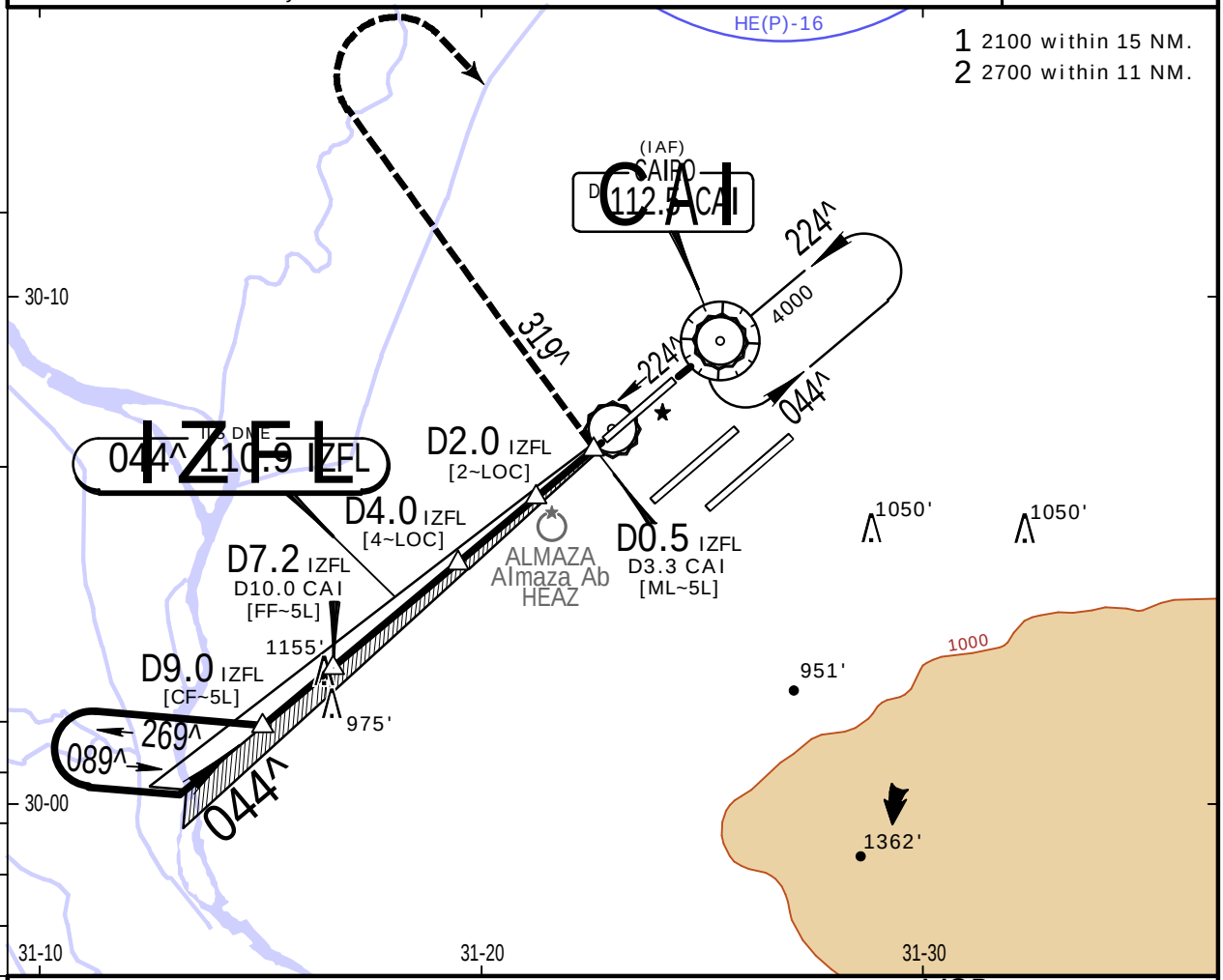

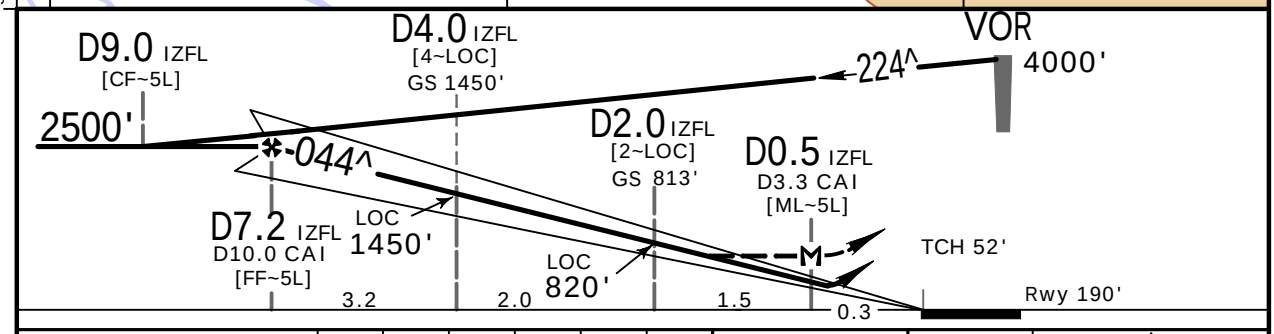

Gnd speed-Kts		70	90	100	120	140	160
ILS GS or LOC Descent Angle	3.00^	372	478	531	637	743	849
MAP at D0.5 IZFL/D3.3 CAI							

HIALS PAPI PAPI

2500' onto 319^ LT

.State.

STRAIGHT-IN LANDING

ILS
DA(H) A: 440' (250') C: 460' (270')
B: 452' (262') D: 471' (281')

LOC (GS out)
MDA(H) 760' (570')

PANS OPS

	FULL	ALS out		ALS out
A	R600m	R1300m	R1900m	R2600m
B				
C				
D	R650m	R1400m		

CHANGES: MSA, HE(P)-2 airspace withdrawn.

| JEPPESEN, 2000, 2023. ALL RIGHTS RESERVED.

Printed from JeppView for Windows 5.3.0.0 on 07 Jan 2024; Terminal chart data cycle 01-2024; Notice: After 18 Jan 2024, 0000Z, this chart may no longer be valid

HECA/CAI
CAIRO INTL

JEPPESEN
29 SEP 23 (11-2) .Eff.5.Oct.

CAIRO, EGYPT
ILS or LOC Rwy 05C

BRIEFING STRIP ™

D-ATIS	CAIRO Approach (R)	CAIRO Tower	Ground South	Ground North
122.6	119.050	118.1	120.4	121.9

LOC IZFC	Final Apch Crs	D6.7 IZFC	ILS DA(H)	Apt Elev 467'
109.9	044^	2500' (2118')	Refer to Minimums	Rwy 382'

MISSED APCH: Climb STRAIGHT AHEAD to 2000', then turn RIGHT climbing to reach VOR at 4500' and hold, or as directed.

Alt Set: hPa | Rwy Elev: 14 hPa | Trans level: FL060 | Trans alt: 4500'

MSA ARP: 1 2000 (077^, 167^, 257^); 2 2500 (2300, 2500, 3800, 347^)

1 2100 within 15 NM.
2 2700 within 11 NM.

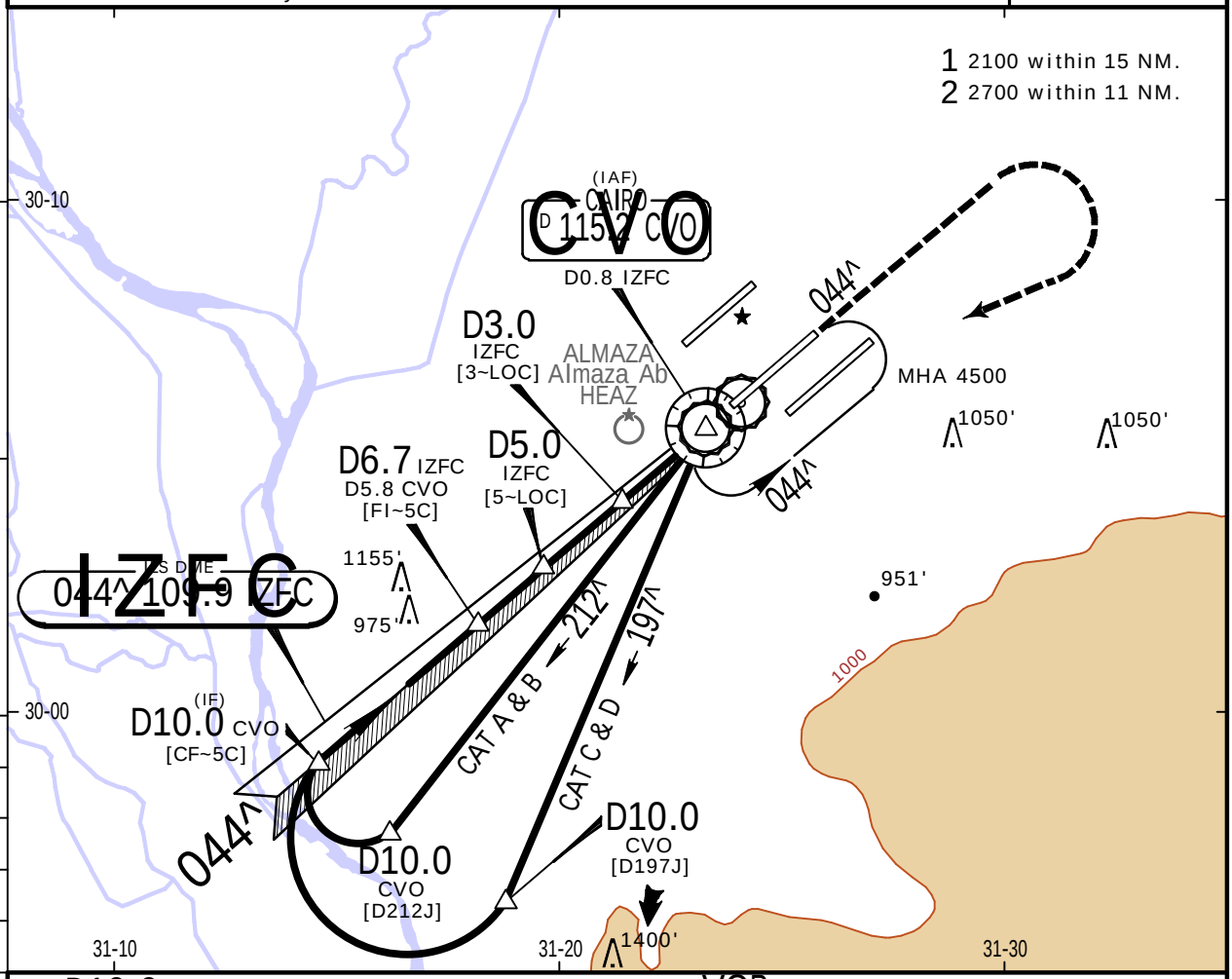

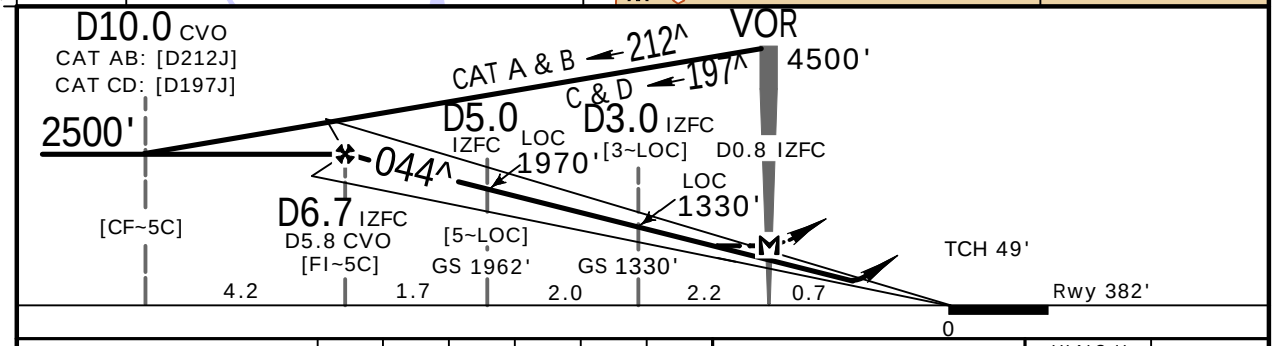

Gnd speed-Kts		70	90	100	120	140	160
ILS GS or LOC Descent Angle	3.00^	372	478	531	637	743	849
MAP at VOR/D0.8 IZFC							

HIALS-II PAPI PAPI 2000'

.State.

STRAIGHT-IN LANDING

	ILS	LOC (GS out)
DA(H)	A: 611' (229') C: 631' (249') B: 623' (241') D: 642' (260')	MDA(H) 710' (328')

PANS OPS

		ALS out		ALS out
A	R550m	R1200m	R800m	R1500m
B		R1300m		
C				
D	R600m			

CHANGES: MInimums.

| JEPPESEN, 2000, 2023. ALL RIGHTS RESERVED.

Printed from JeppView for Windows 5.3.0.0 on 07 Jan 2024; Terminal chart data cycle 01-2024; Notice: After 18 Jan 2024, 0000Z, this chart may no longer be valid

HECA/CAI
CAIRO INTL

JEPPESEN

29 SEP 23 (11-2A) .Eff.5.Oct.

CAIRO, EGYPT
CAT II ILS Rwy 05C

BRIEFING STRIP ™

D-ATIS	CAIRO Approach (R)	CAIRO Tower	Ground South	Ground North
122.6	119.050	118.1	120.4	121.9

LOC IZFC	Final Apch Crs	D6.7 IZFC	CAT II ILS RA/DA(H)	Apt Elev 467'
109.9	044^	2500' (2118')	Refer to Minimums	Rwy 382'

MISSED APCH: Climb STRAIGHT AHEAD to 2000', then turn RIGHT climbing to reach VOR at 4500' and hold, or as directed.

Alt Set: hPa | Rwy Elev: 14 hPa | Trans level: FL060 | Trans alt: 4500'

Special Aircrew and Acft Certification Required.

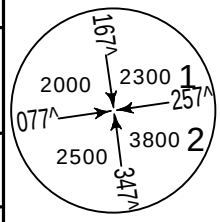

MSA ARP

1 2100 within 15 NM.
2 2700 within 11 NM.

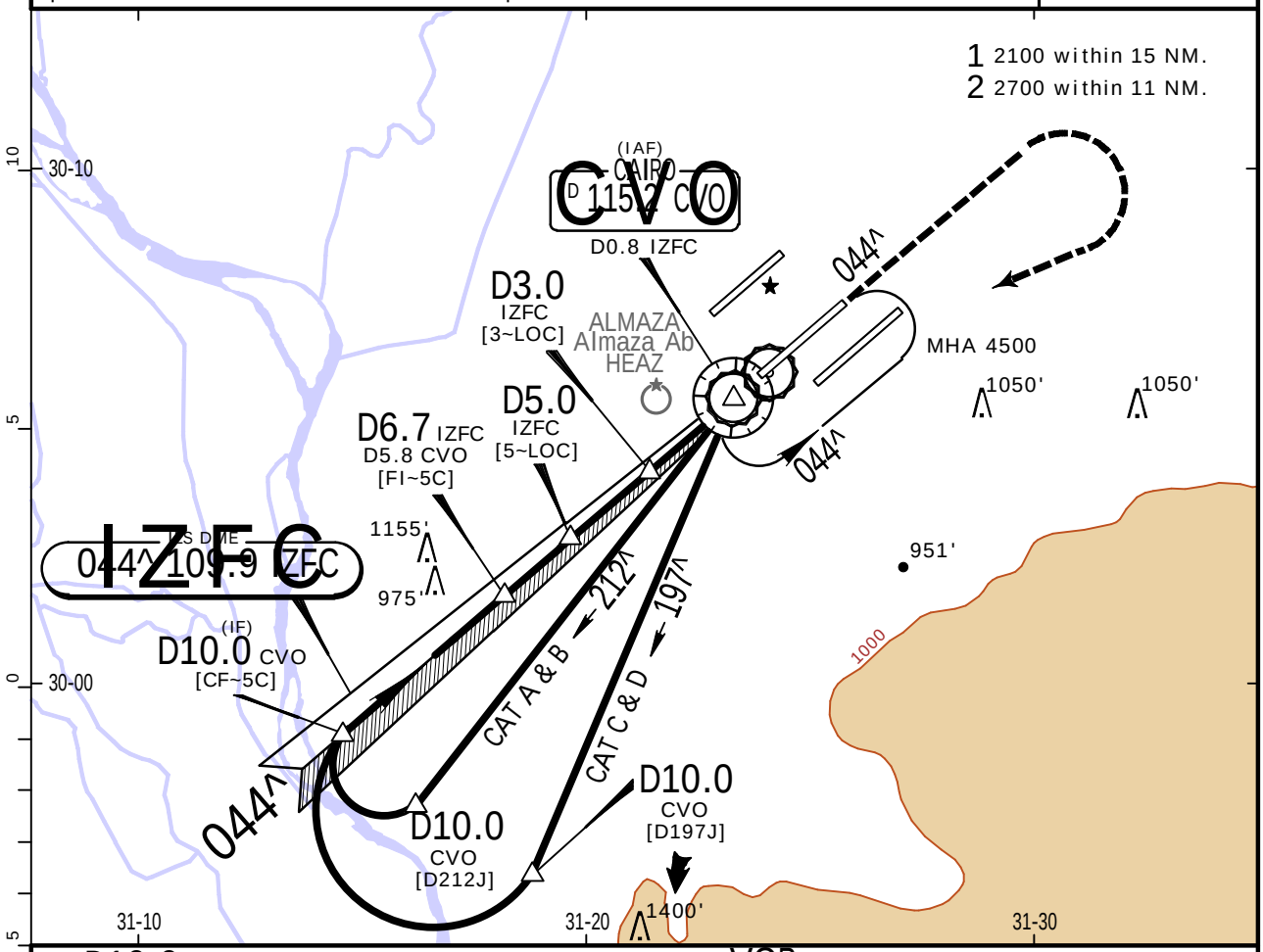

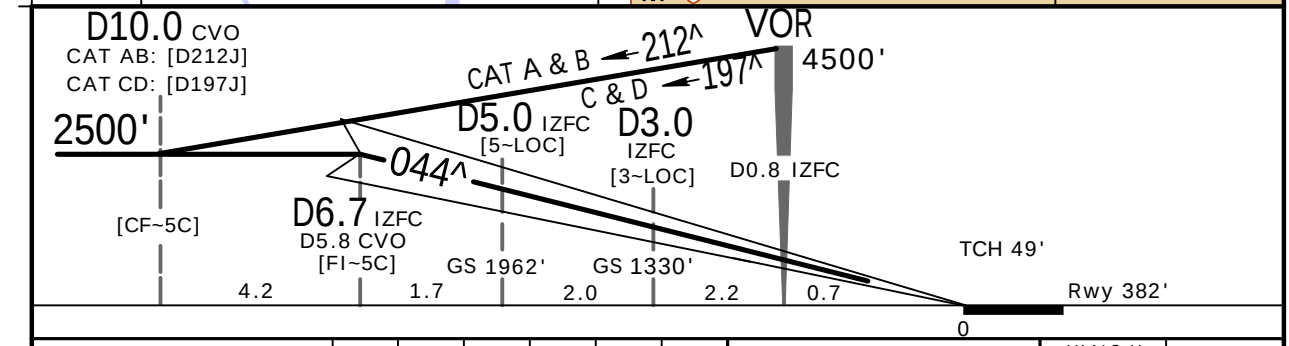

Gnd speed-Kts		70	90	100	120	140	160
GS	3.00^	372	478	531	637	743	849

HIALS-II
PAPI PAPI
2000'

.State.

STRAIGHT-IN LANDING
CAT II ILS

A	B	C	D
RA 104'	RA 111'	RA 119'	RA 129'
DA(H) 482' (100')	DA(H) 491' (109')	DA(H) 503' (121')	DA(H) 517' (135')

PANS OPS

R300m	R400m

CHANGES: None.

JEPPESEN, 2007, 2023. ALL RIGHTS RESERVED.

Printed from JeppView for Windows 5.3.0.0 on 07 Jan 2024; Terminal chart data cycle 01-2024; Notice: After 18 Jan 2024, 0000Z, this chart may no longer be valid

HECA/CAI
CAIRO INTL

JEPPESEN
29 SEP 23 (11-3) .Eff.5.Oct.

CAIRO, EGYPT
ILS or LOC Rwy 05R

BRIEFING STRIP ™

D-ATIS	CAIRO Approach (R)	CAIRO Tower	Ground South	Ground North
122.6	119.050	118.1	120.4	121.9

LOC IZFR	Final Apch Crs	D7.0 IZFR	ILS DA(H)	Apt Elev 467'
108.9	044^	2700' (2252')	Refer to Minimums	Rwy 448'

MISSED APCH: Climb STRAIGHT AHEAD to 1500', then turn RIGHT on 079^ to 2000', then turn RIGHT to reach VOR at 4500' and hold, or as directed.

Alt Set: hPa | Rwy Elev: 16 hPa | Trans level: FL060 | Trans alt: 4500'

MSA ARP: 2000 (167^), 2300 1 (257^), 3800 2 (347^), 2500 (077^)

1 2100 within 15 NM.
2 2700 within 11 NM.

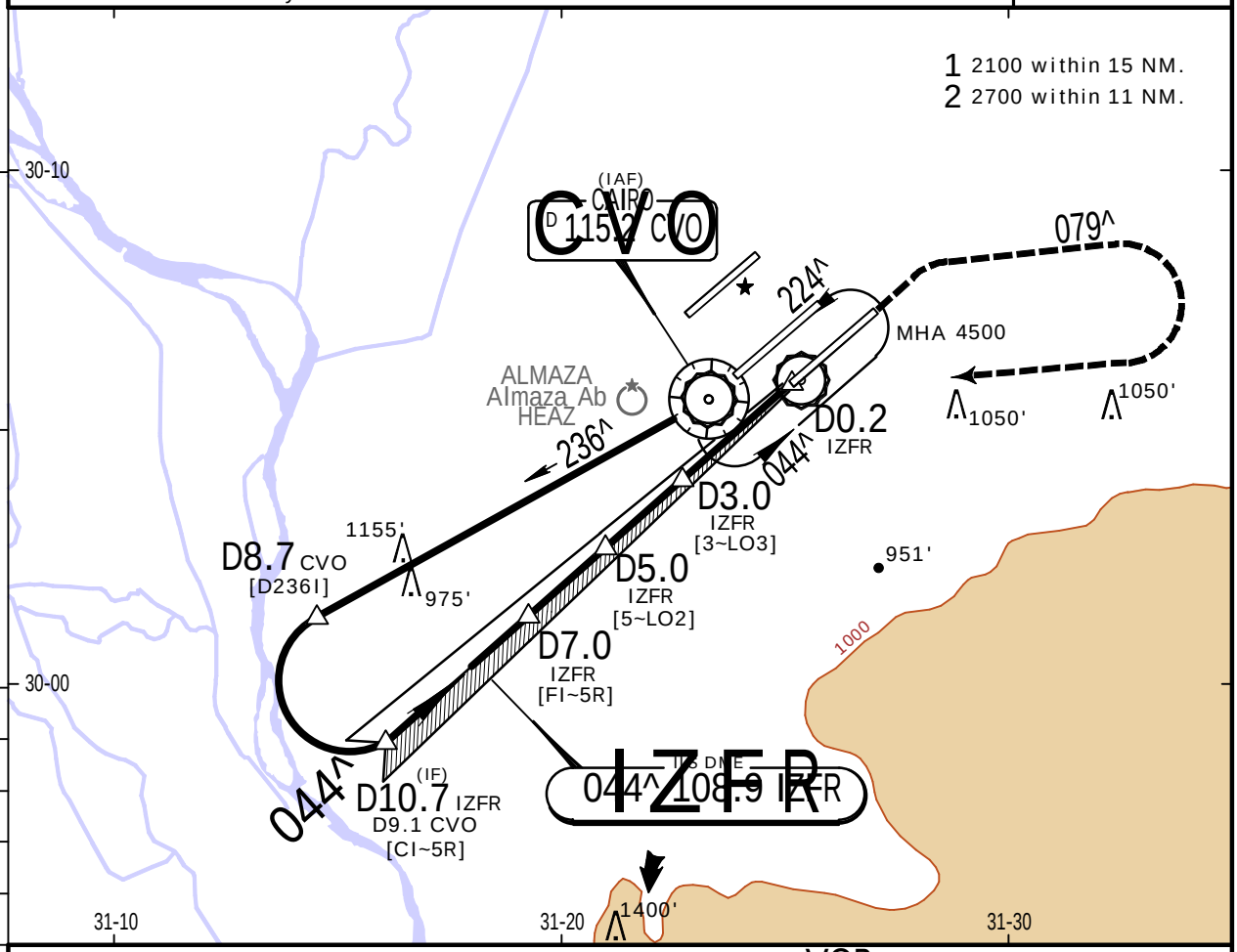

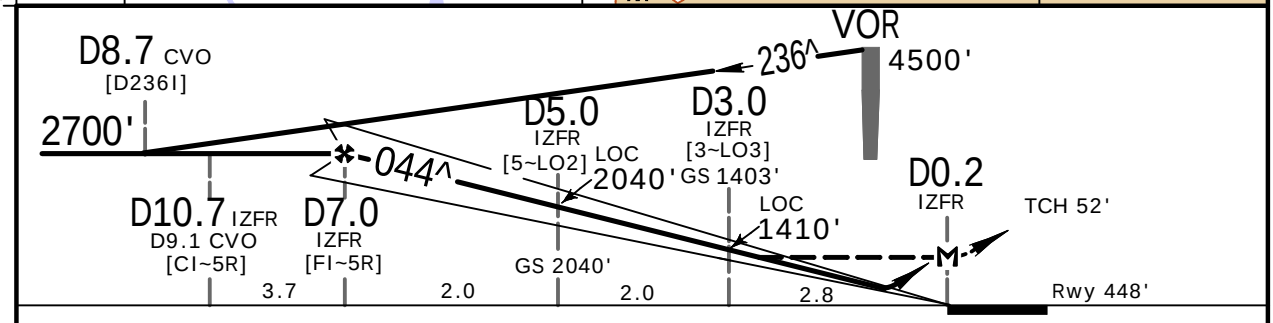

Gnd speed-Kts		70	90	100	120	140	160
ILS GS or LOC Descent Angle	3.00^	372	478	531	637	743	849
MAP at D0.2 IZFR							

HIALS-II PAPI PAPI | 1500' | 2000' on RT | 079^

.State.

STRAIGHT-IN LANDING

ILS DA(H) A: 677' (229') B: 689' (241') C: 697' (249') D: 708' (260')

LOC (GS out) MDA(H) 800' (352')

PANS OPS

	ALS out		ALS out
A	R1200m	R900m	R1600m
B, C	R550m	R1300m	
D	R600m		

CHANGES: Minimums.

JEPPESEN, 2010, 2023. ALL RIGHTS RESERVED.

Printed from JeppView for Windows 5.3.0.0 on 07 Jan 2024; Terminal chart data cycle 01-2024; Notice: After 18 Jan 2024, 0000Z, this chart may no longer be valid

HECA/CAI
CAIRO INTL

JEPPESEN

29 SEP 23 (11-3A) .Eff.5.Oct.

CAIRO, EGYPT
CAT II ILS Rwy 05R

BRIEFING STRIP ™

D-ATIS	CAIRO Approach (R)	CAIRO Tower	Ground South	Ground North
122.6	119.050	118.1	120.4	121.9

LOC IZFR	Final Apch Crs	D7.0 IZFR	CAT II ILS RA/DA(H) Refer to Minimums	Apt Elev 467' Rwy 448'
108.9	044^	2700' (2252')		

MISSED APCH: Climb STRAIGHT AHEAD to 1500', then turn RIGHT on 079^ to 2000', then turn RIGHT to reach VOR at 4500' and hold, or as directed.

Alt Set: hPa Rwy Elev: 16 hPa Trans level: FL060 Trans alt: 4500'

Special Aircrew and Acft Certification Required.

MSA ARP: 2000 (167^), 2300 (1, 257^), 3800 (2, 347^), 2500 (077^)

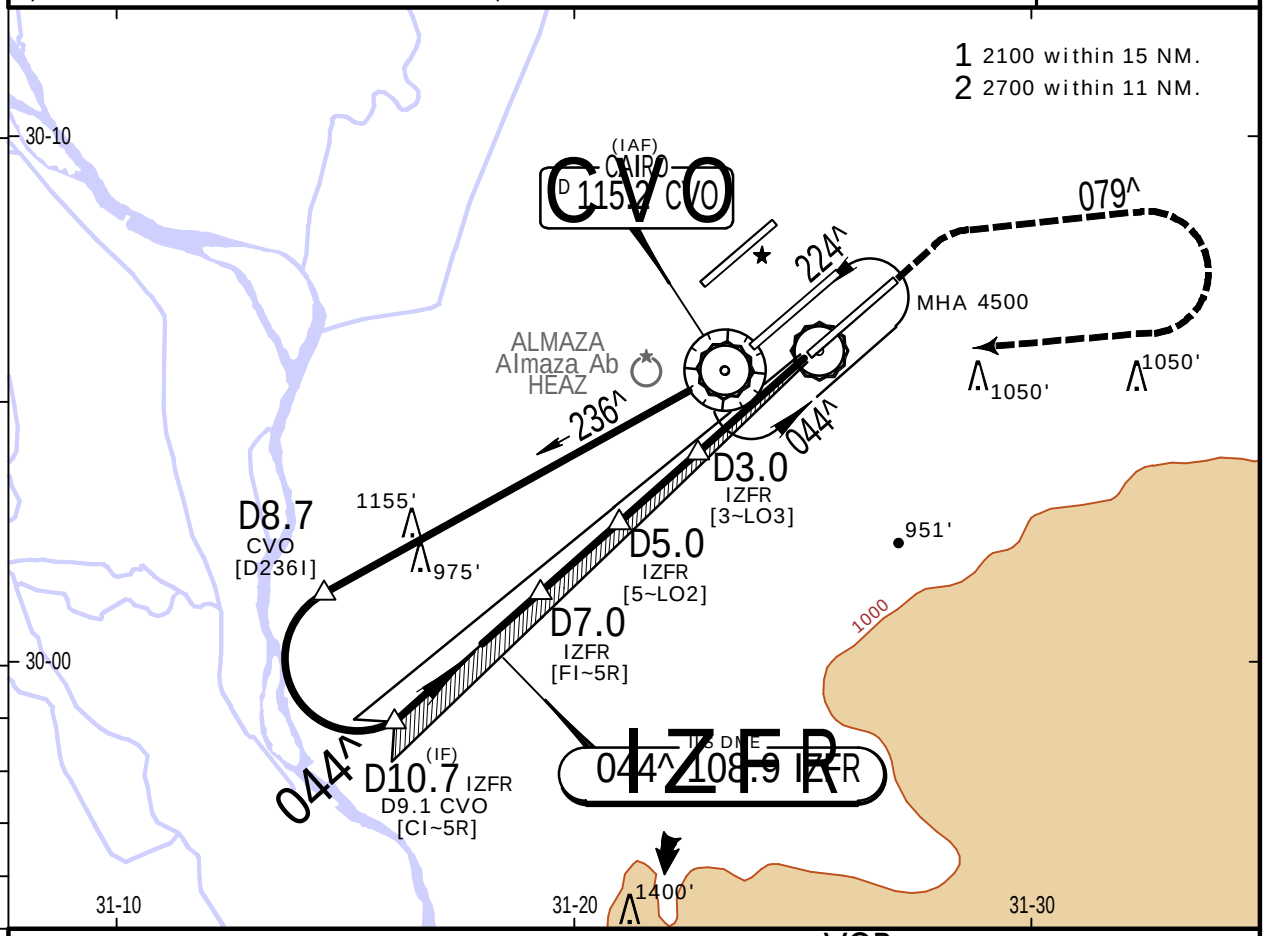

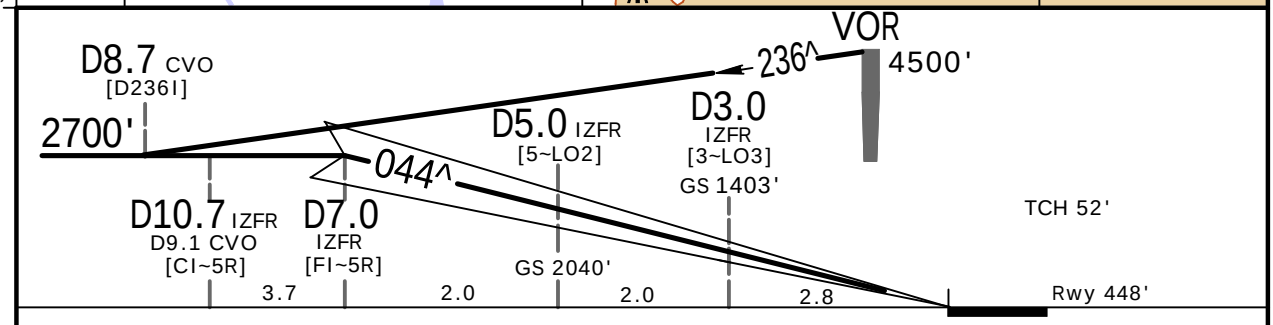

Gnd speed-Kts		70	90	100	120	140	160
GS	3.00^	372	478	531	637	743	849

HIALS-II PAPI PAPI

1500'

2000' on RT 079^

.State.

STRAIGHT-IN LANDING
CAT II ILS

AB	C	D
RA 90'	RA 100'	RA 111'
DA(H) 548' (100')	DA(H) 560' (112')	DA(H) 574' (126')

PANS OPS

R300m	R400m

CHANGES: None.

JEPPESEN, 2015, 2023. ALL RIGHTS RESERVED.

Printed from JeppView for Windows 5.3.0.0 on 07 Jan 2024; Terminal chart data cycle 01-2024; Notice: After 18 Jan 2024, 0000Z, this chart may no longer be valid

HECA/CAI
CAIRO INTL

JEPPESEN
22 SEP 23 (11-4) .Eff.5.Oct.

CAIRO, EGYPT
ILS or LOC Rwy 23L

BRIEFING STRIP ™

D-ATIS	CAIRO Approach (R)	CAIRO Tower	Ground South	Ground North
122.6	119.050	118.1	120.4	121.9

LOC ITTL	Final Apch Crs	D5.2 ITTL	ILS DA(H)	Apt Elev 467'
108.7	224^	2100' (1633')	Refer to Minimums	Rwy 467'

MISSED APCH: Turn LEFT to 199^ climbing to 2000', then turn LEFT climbing to reach VOR at 4500' and hold, or as directed.

Alt Set: hPa | Rwy Elev: 17 hPa | Trans level: FL060 | Trans alt: 4500'

MSA ARP: 167^ 2000 1; 2300 257^; 077^ 3800 2; 2500 347^

1 2100 within 15 NM.
2 2700 within 11 NM.

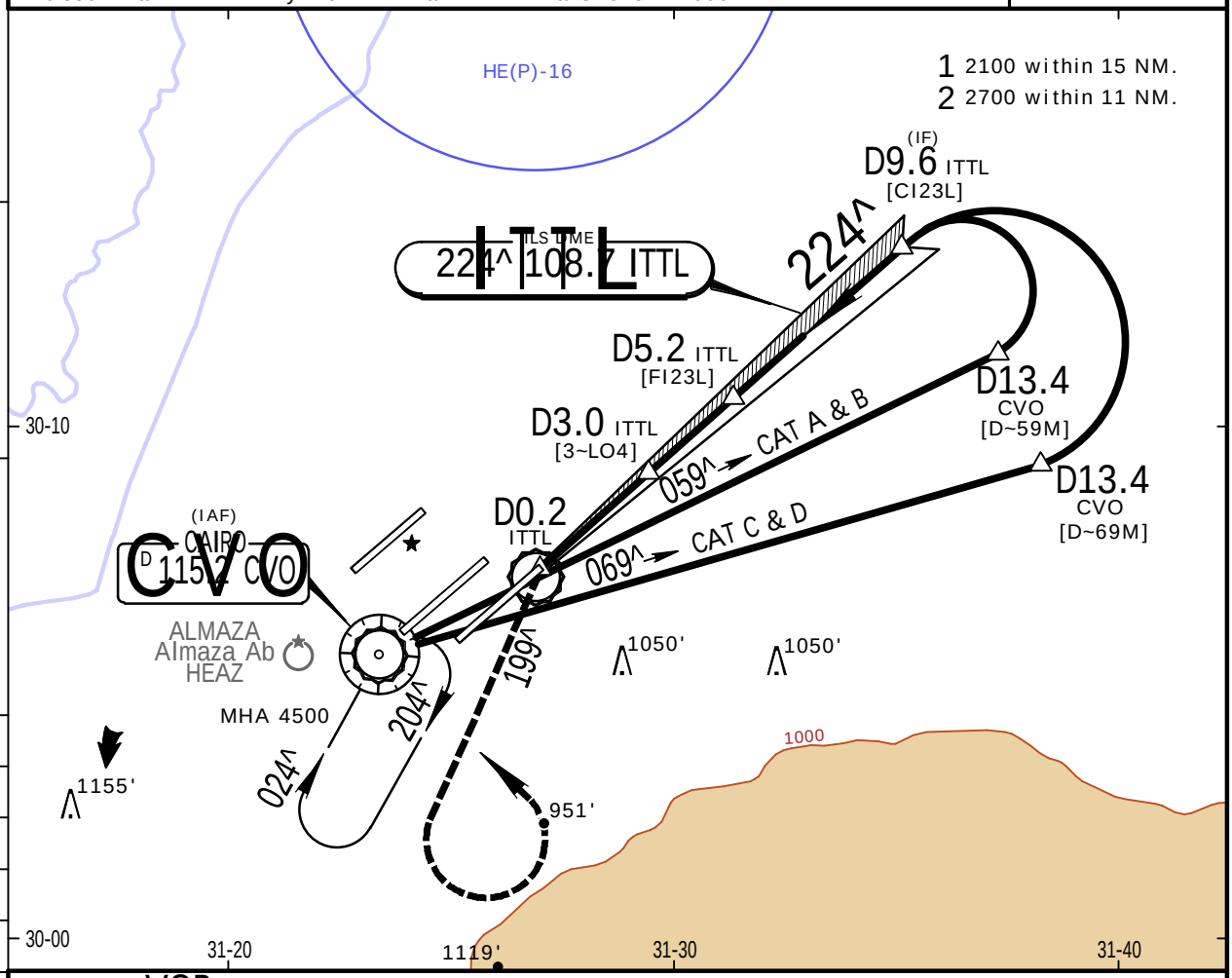

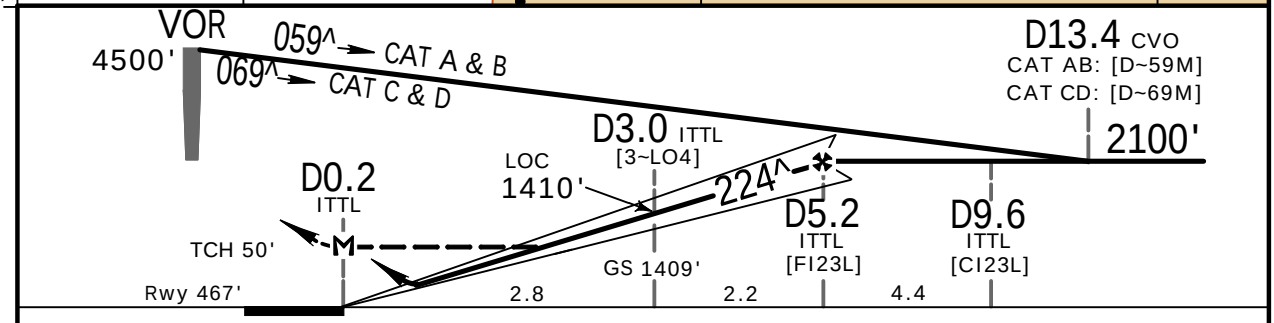

Gnd speed-Kts		70	90	100	120	140	160
ILS GS or LOC Descent Angle	3.00^	372	478	531	637	743	849
MAP at D0.2 ITTL							

HIALS-II PAPI PAPI 2000' LT on 199^

.State.

STRAIGHT-IN LANDING

ILS DA(H) A: 697' (230') B: 709' (242') C: 717' (250') D: 728' (261')

LOC (GS out) MDA(H) 970' (503')

PANS OPS

		ALS out		ALS out
A	R550m	R1200m	R1600m	R2400m
B		R1300m		
C				
D	R600m			

CHANGES: Minimums.

| JEPPESEN, 2010, 2023. ALL RIGHTS RESERVED.

Printed from JeppView for Windows 5.3.0.0 on 07 Jan 2024; Terminal chart data cycle 01-2024; Notice: After 18 Jan 2024, 0000Z, this chart may no longer be valid

HECA/CAI
CAIRO INTL

JEPPESEN

22 SEP 23 (11-4A) .Eff.5.Oct.

CAIRO, EGYPT
CAT II ILS Rwy 23L

BRIEFING STRIP ™

D-ATIS	CAIRO Approach (R)	CAIRO Tower	Ground South	Ground North
122.6	119.050	118.1	120.4	121.9

LOC ITTL	Final Apch Crs	D5.2 ITTL	CAT II ILS RA/DA(H) Refer to Minimums	Apt Elev 467' Rwy 467'
108.7	224^	2100' (1633')		

MISSED APCH: Turn LEFT to 199^ climbing to 2000', then turn LEFT climbing to reach VOR at 4500' and hold, or as directed.

Alt Set: hPa | Rwy Elev: 17 hPa | Trans level: FL060 | Trans alt: 4500'

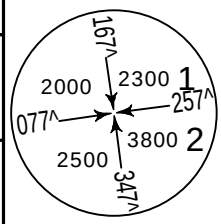

MSA ARP

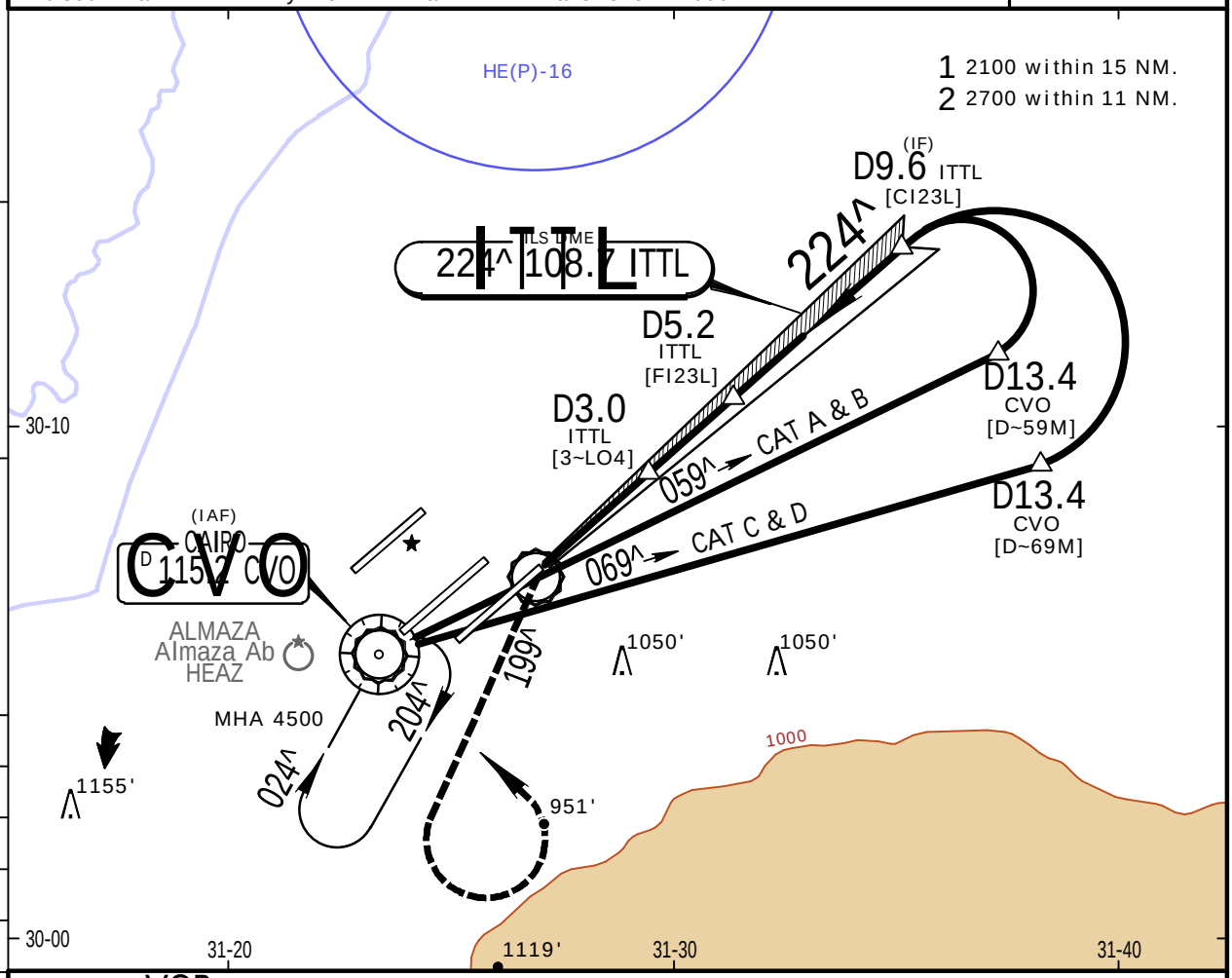

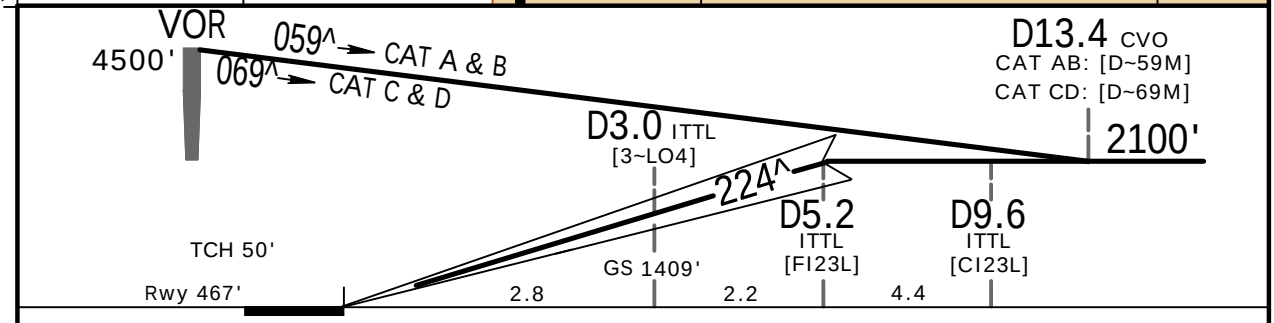

Gnd speed-Kts		70	90	100	120	140	160
GS	3.00^	372	478	531	637	743	849

HIALS-II PAPI PAPI

2000' LT on 199^

.State.

STRAIGHT-IN LANDING
CAT II ILS

AB	C	D
RA 101'	RA 115'	RA 130'
DA(H) 567' (100')	DA(H) 579' (112')	DA(H) 593' (126')

PANS OPS

R300m	R400m

CHANGES: None.

JEPPESEN, 2015, 2023. ALL RIGHTS RESERVED.

Printed from JeppView for Windows 5.3.0.0 on 07 Jan 2024; Terminal chart data cycle 01-2024; Notice: After 18 Jan 2024, 0000Z, this chart may no longer be valid

HECA/CAI
CAIRO INTL

JEPPESEN

29 SEP 23 (11-5) .Eff.5.Oct.

CAIRO, EGYPT
ILS or LOC Rwy 23C

BRIEFING STRIP ™

D-ATIS	CAIRO Approach (R)	CAIRO Tower	Ground South	Ground North
122.6	119.050	118.1	120.4	121.9

LOC ITTC	Final Apch Crs	D5.1 ITTC	ILS DA(H)	Apt Elev 467'
109.5	224^	2000' (1625')	Refer to Minimums	Rwy 375'

MISSED APCH: Climb STRAIGHT AHEAD to 2000'. Not later than D4.5 CVO turn LEFT to reach VOR at 4500' and hold, or as directed.

Alt Set: hPa | Rwy Elev: 14 hPa | Trans level: FL060 | Trans alt: 4500'

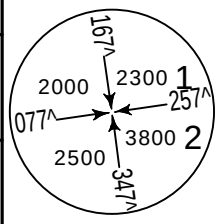

MSA ARP

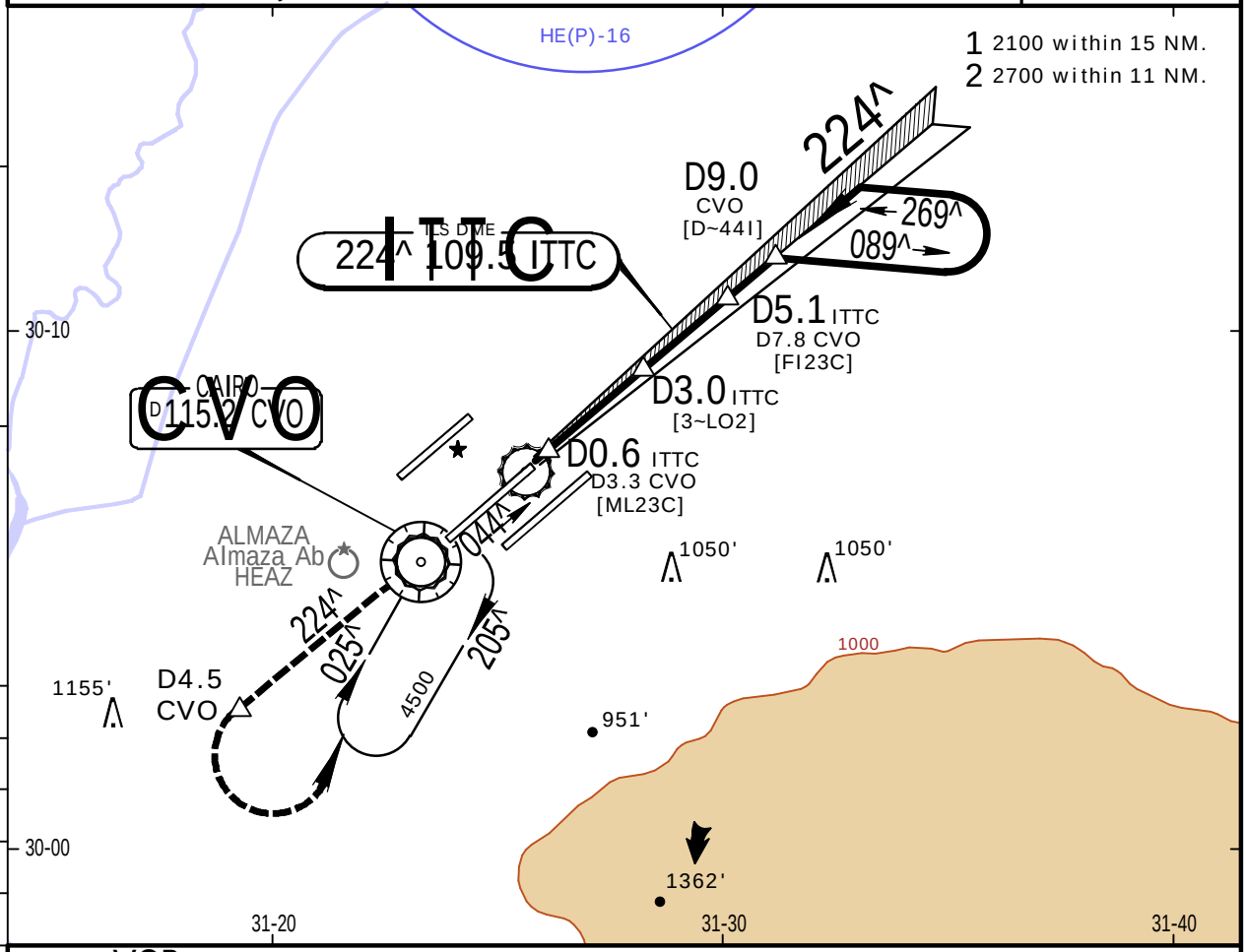

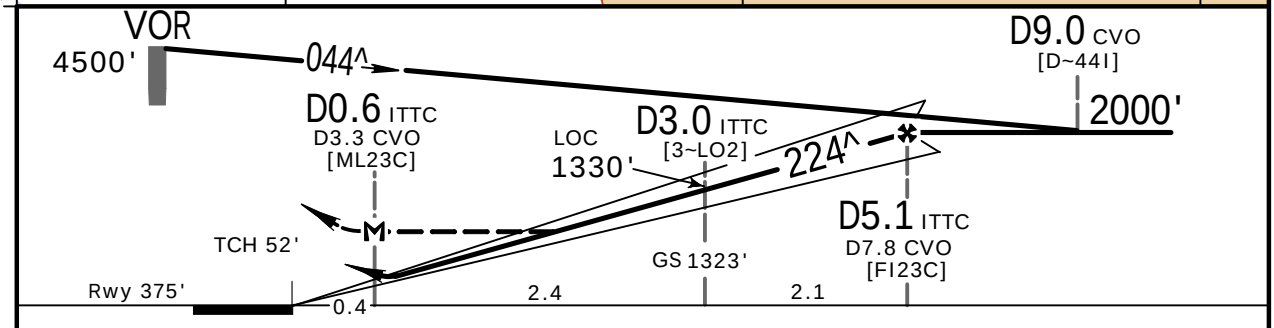

Gnd speed-Kts		70	90	100	120	140	160
ILS GS or LOC Descent Angle	3.00^	372	478	531	637	743	849
MAP at D0.6 ITTC/D3.3 CVO							

HIALS-II PAPI PAPI

2000' ↑ D4.5 CVO whichever is earlier ↑

.State.

STRAIGHT-IN LANDING

ILS — DA(H) A: 605' (230') B: 617' (242') C: 625' (250') D: 636' (261')

LOC (GS out) — MDA(H) 760' (385')

PANS OPS

		ALS out		ALS out
A	R800m	R1200m	R1100m	R1800m
B				
C		R1300m		
D	R900m			

CHANGES: Minimums.

| JEPPESEN, 2000, 2023. ALL RIGHTS RESERVED.

Printed from JeppView for Windows 5.3.0.0 on 07 Jan 2024; Terminal chart data cycle 01-2024; Notice: After 18 Jan 2024, 0000Z, this chart may no longer be valid

HECA/CAI
CAIRO INTL

JEPPESEN

29 SEP 23 (11-5A) .Eff.5.Oct.

CAIRO, EGYPT
CAT II ILS Rwy 23C

BRIEFING STRIP ™

D-ATIS	CAIRO Approach (R)	CAIRO Tower	Ground South	Ground North
122.6	119.050	118.1	120.4	121.9

LOC ITTC	Final Apch Crs	D5.1 ITTC	CAT II ILS RA/DA(H) Refer to Minimums	Apt Elev 467' Rwy 375'
109.5	224^	2000' (1625')		

MISSED APCH: Climb STRAIGHT AHEAD to 2000'. Not later than D4.5 CVO turn LEFT to reach VOR at 4500' and hold, or as directed.

Alt Set: hPa Rwy Elev: 14 hPa Trans level: FL060 Trans alt: 4500'

Special Aircrew and Acft Certification Required.

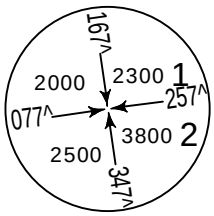

MSA ARP

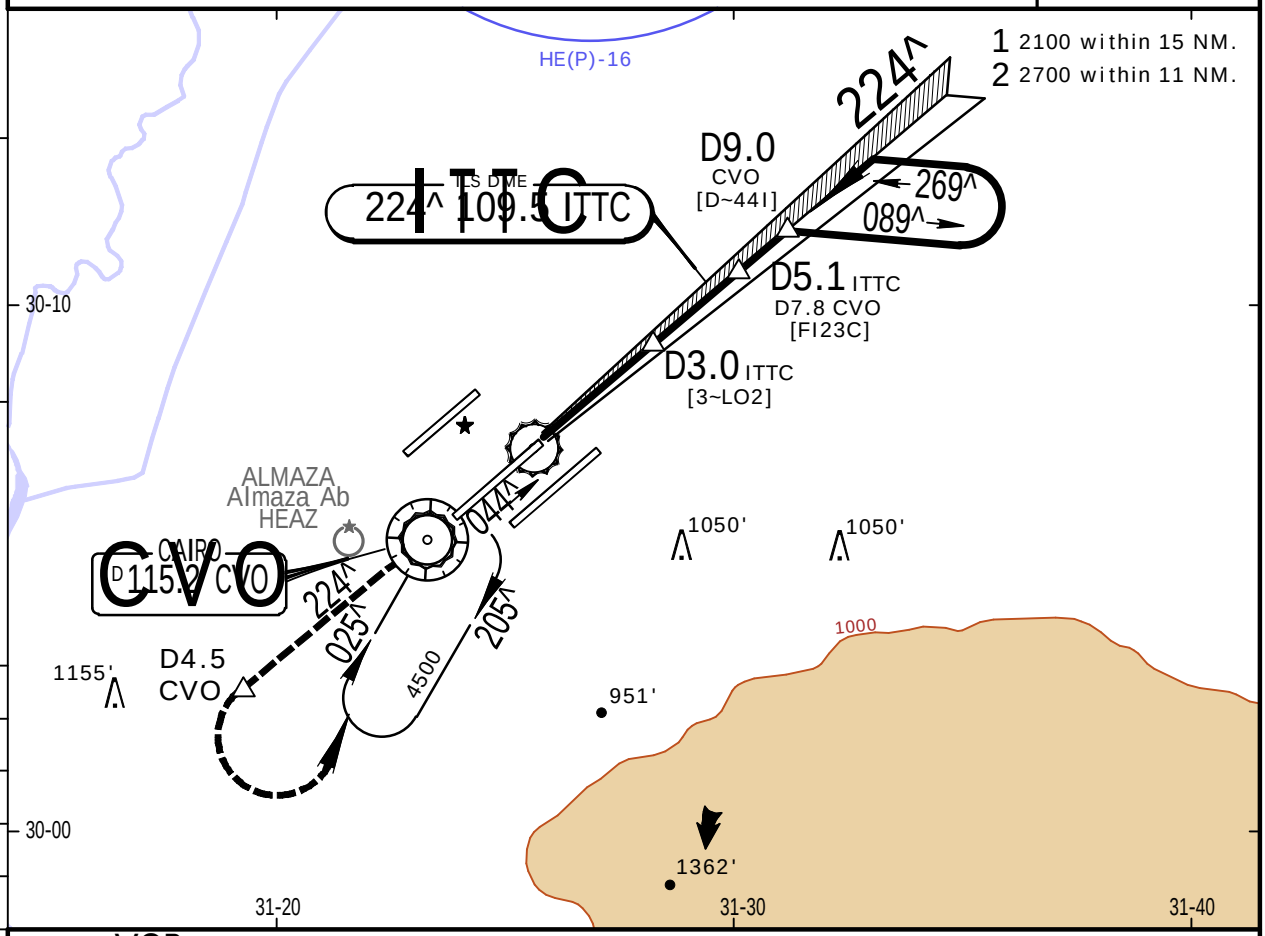

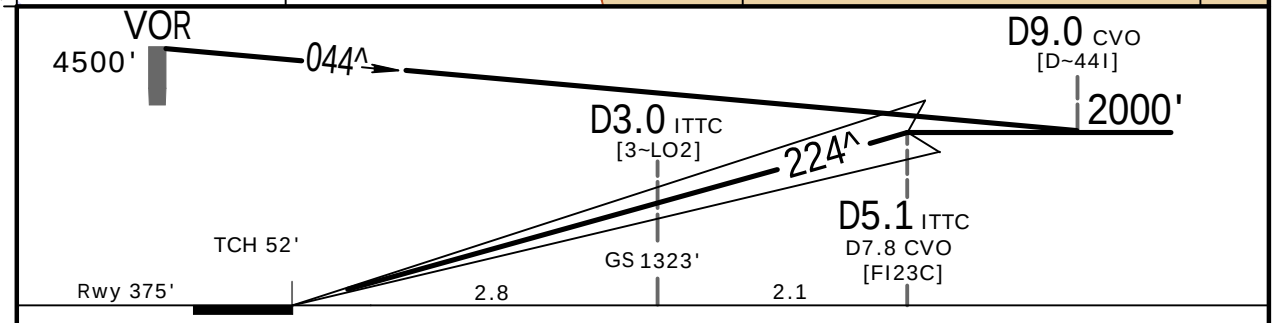

Gnd speed-Kts	70	90	100	120	140	160
GS 3.00^	372	478	531	637	743	849

HIALS-II
PAPI PAPI

2000' ↑ D4.5 CVO ↑ whichever is earlier

.State.

STRAIGHT-IN LANDING
CAT II ILS

A	B	C	D
RA 107'	RA 116'	RA 129'	RA 143'
DA(H) 475' (100')	DA(H) 484' (109')	DA(H) 496' (121')	DA(H) 510' (135')

PANS OPS

R300m	R400m

CHANGES: None.

JEPPESEN, 2007, 2023. ALL RIGHTS RESERVED.

Printed from JeppView for Windows 5.3.0.0 on 07 Jan 2024; Terminal chart data cycle 01-2024; Notice: After 18 Jan 2024, 0000Z, this chart may no longer be valid

HECA/CAI
CAIRO INTL

JEPPESEN

4 AUG 23 (11-6) .Eff.10.Aug.

CAIRO, EGYPT
ILS or LOC Rwy 23R

BRIEFING STRIP ™

D-ATIS	CAIRO Approach (R)	CAIRO Tower	Ground South	Ground North
122.6	119.050	118.1	120.4	121.9

LOC ITTR	Final Apch Crs	D5.5 ITTR	ILS DA(H) Refer to Minimums	Apt Elev 467' Rwy 199'
110.3	224^	2000' (1801')		

MISSED APCH: Turn RIGHT onto track 279^ climbing to 2000', then turn RIGHT to reach VOR at 3500' and hold, or as directed.
MAX 220 KT.

Alt Set: hPa | Rwy Elev: 7 hPa | Trans level: FL060 | Trans alt: 4500'

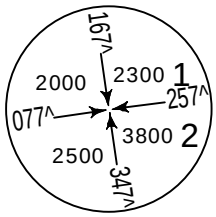

MSA ARP

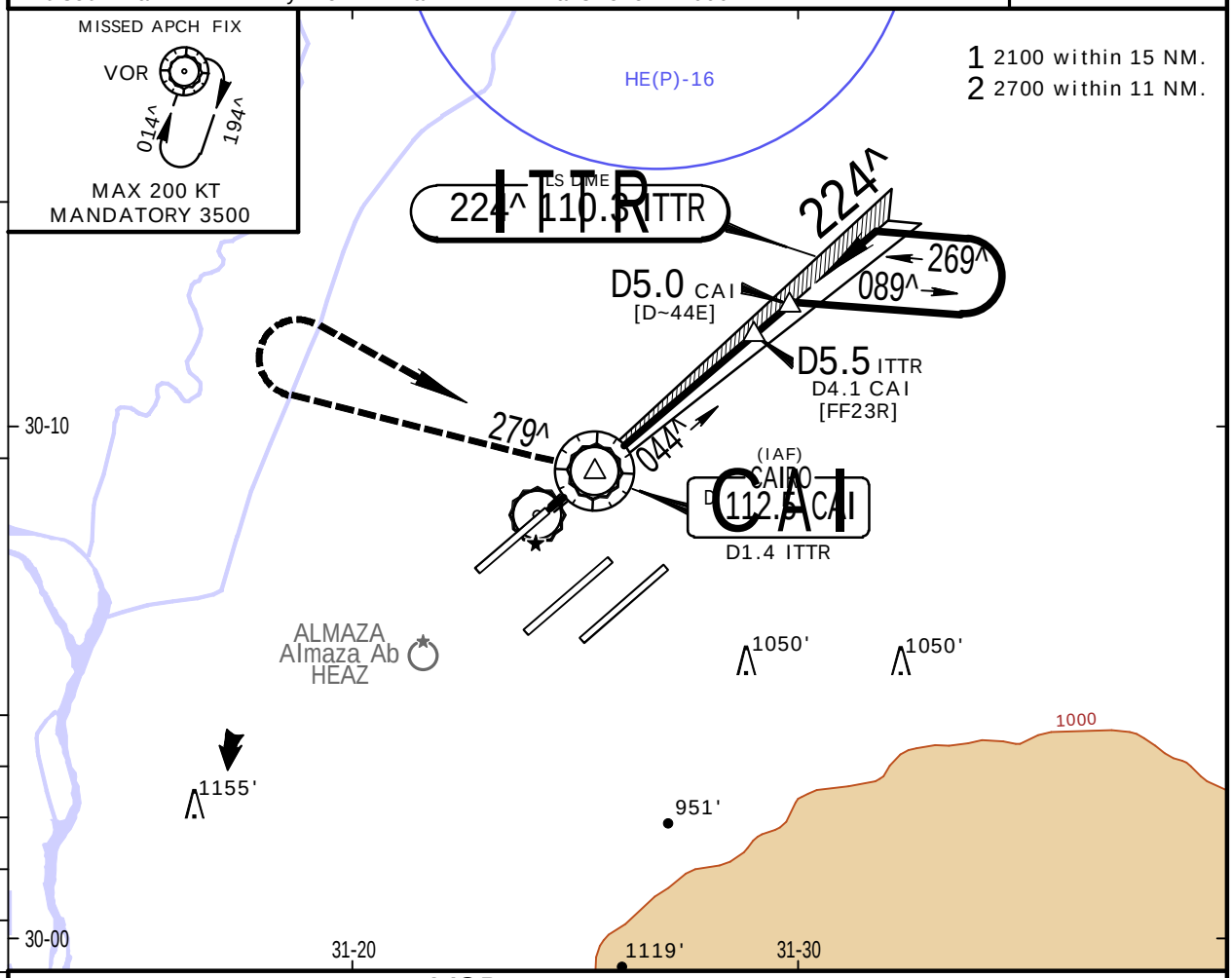

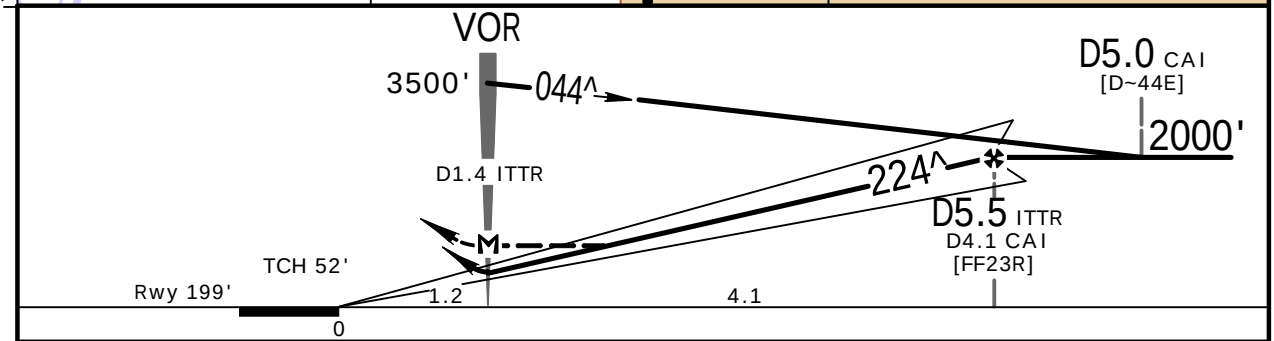

Gnd speed-Kts		70	90	100	120	140	160
ILS GS or LOC Descent Angle	3.00^	372	478	531	637	743	849
MAP at VOR/D1.4 ITTR							

HIALS PAPI PAPI

220 KT MAX

2000' on 279^ RT

.State.

STRAIGHT-IN LANDING

ILS
DA(H) A: 658' (459') C: 678' (479')
B: 670' (471') D: 689' (490')

LOC (GS out)
MDA(H) 780' (581')

PANS OPS

	FULL	ALS out		ALS out
A	R1500m	R2100m	R2500m	R2700m
B		R2200m		
C	R2000m			
D	R2100m	R2300m		

CHANGES: MSA.

| JEPPESEN, 2000, 2023. ALL RIGHTS RESERVED.

Printed from JeppView for Windows 5.3.0.0 on 07 Jan 2024; Terminal chart data cycle 01-2024; Notice: After 18 Jan 2024, 0000Z, this chart may no longer be valid

HECA/CAI
CAIRO INTL

JEPPESEN

4 AUG 23 (12-1) .Eff.10.Aug.

CAIRO, EGYPT
RNP Rwy 05L

BRIEFING STRIP ™

D-ATIS	CAIRO Approach (R)	CAIRO Tower	Ground South	Ground North
122.6	119.050	118.1	120.4	121.9

RNAV	Final Apch Crs	CA436 MANDATORY	MDA(H)	Apt Elev 467'
	044^	2500' (2310')	760' (570')	Rwy 190'

MISSED APCH: Climb STRAIGHT AHEAD to cross CA412, then turn RIGHT to reach CA442 at 4500' and hold, or as directed.

Alt Set: hPa | Rwy Elev: 7 hPa | Trans level: FL060 | Trans alt: 4500'

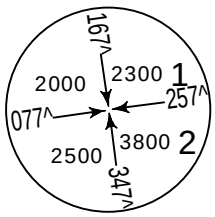

MSA ARP

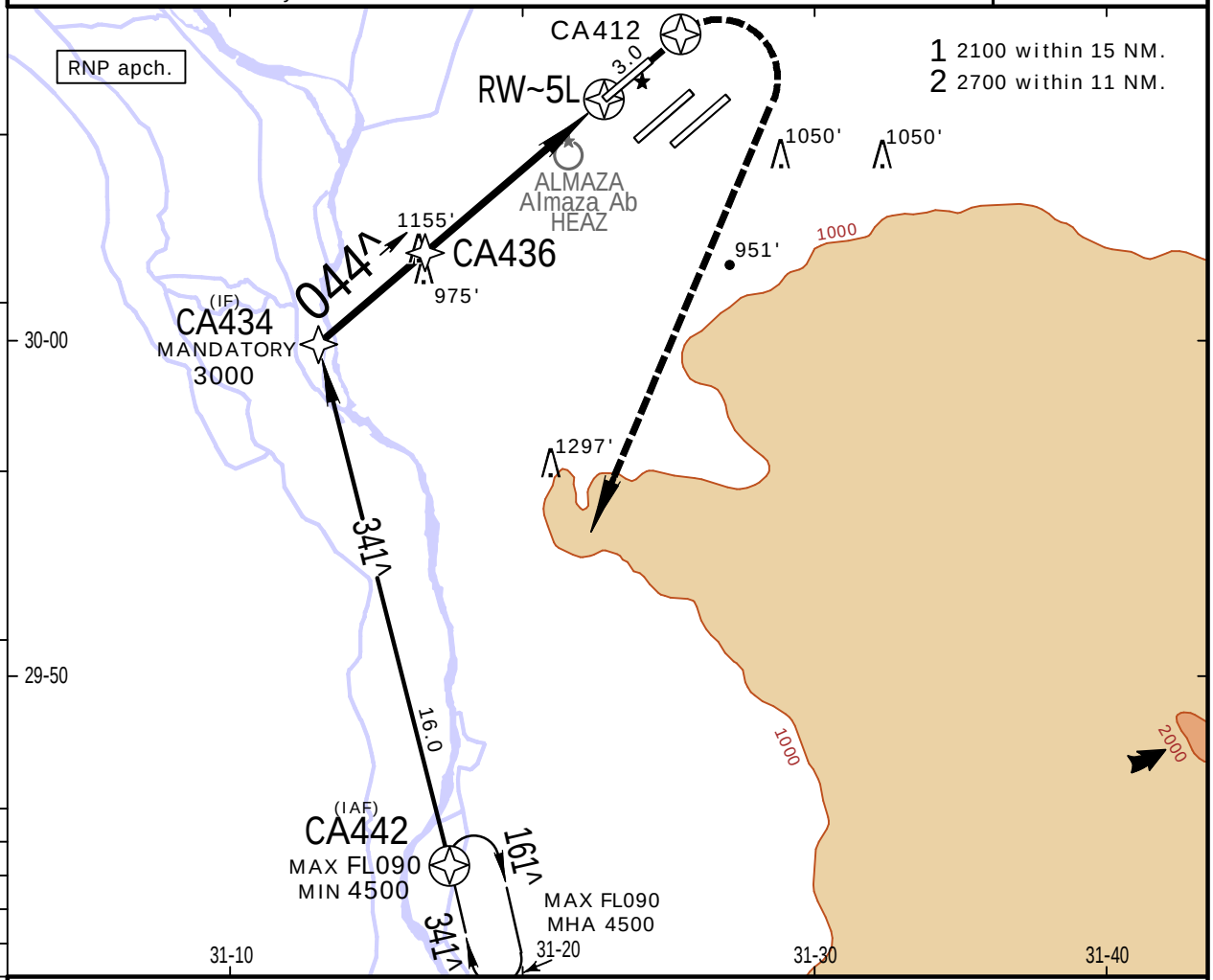

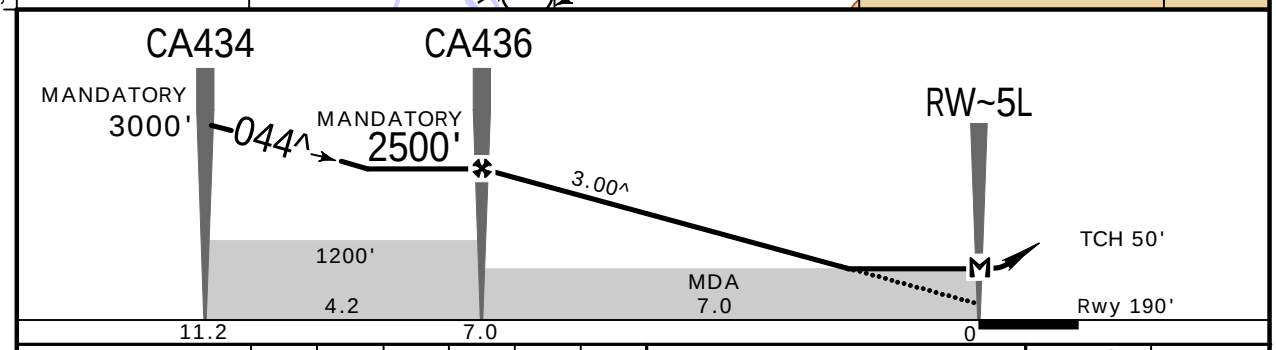

Gnd speed-Kts	70	90	100	120	140	160
Descent Angle 3.00^	372	478	531	637	743	849
MAP at RW~5L						

HIALS
PAPI PAPI

CA412

.State.

STRAIGHT-IN LANDING
LNAV
MDA(H) 760' (570')

		ALS out
A		
B		
C	R1900m	R2600m
D		

PANS OPS

CHANGES: MSA, HE(P)-2 and HE(R)-17 airspaces withdrawn, procedure.

| JEPPESEN, 2006, 2023. ALL RIGHTS RESERVED.

Printed from JeppView for Windows 5.3.0.0 on 07 Jan 2024; Terminal chart data cycle 01-2024; Notice: After 18 Jan 2024, 0000Z, this chart may no longer be valid

HECA/CAI
CAIRO INTL

JEPPESEN

4 AUG 23 (12-2) .Eff.10.Aug.

CAIRO, EGYPT
RNP Rwy 05C

BRIEFING STRIP ™

D-ATIS	CAIRO Approach (R)	CAIRO Tower	Ground South	Ground North
122.6	119.050	118.1	120.4	121.9

RNAV	Final Apch Crs	CA417 MANDATORY	MDA(H)	Apt Elev 467'
	044^	2500' (2118')	710' (328')	Rwy 382'

MISSED APCH: Climb STRAIGHT AHEAD to cross CA419, then turn RIGHT to reach CA442 at 4500' and hold or as directed.

Alt Set: hPa | Rwy Elev: 14 hPa | Trans level: FL060 | Trans alt: 4500'

MSA ARP: 2000 (167^), 2300 (257^) 1; 2500 (077^), 3800 (347^) 2

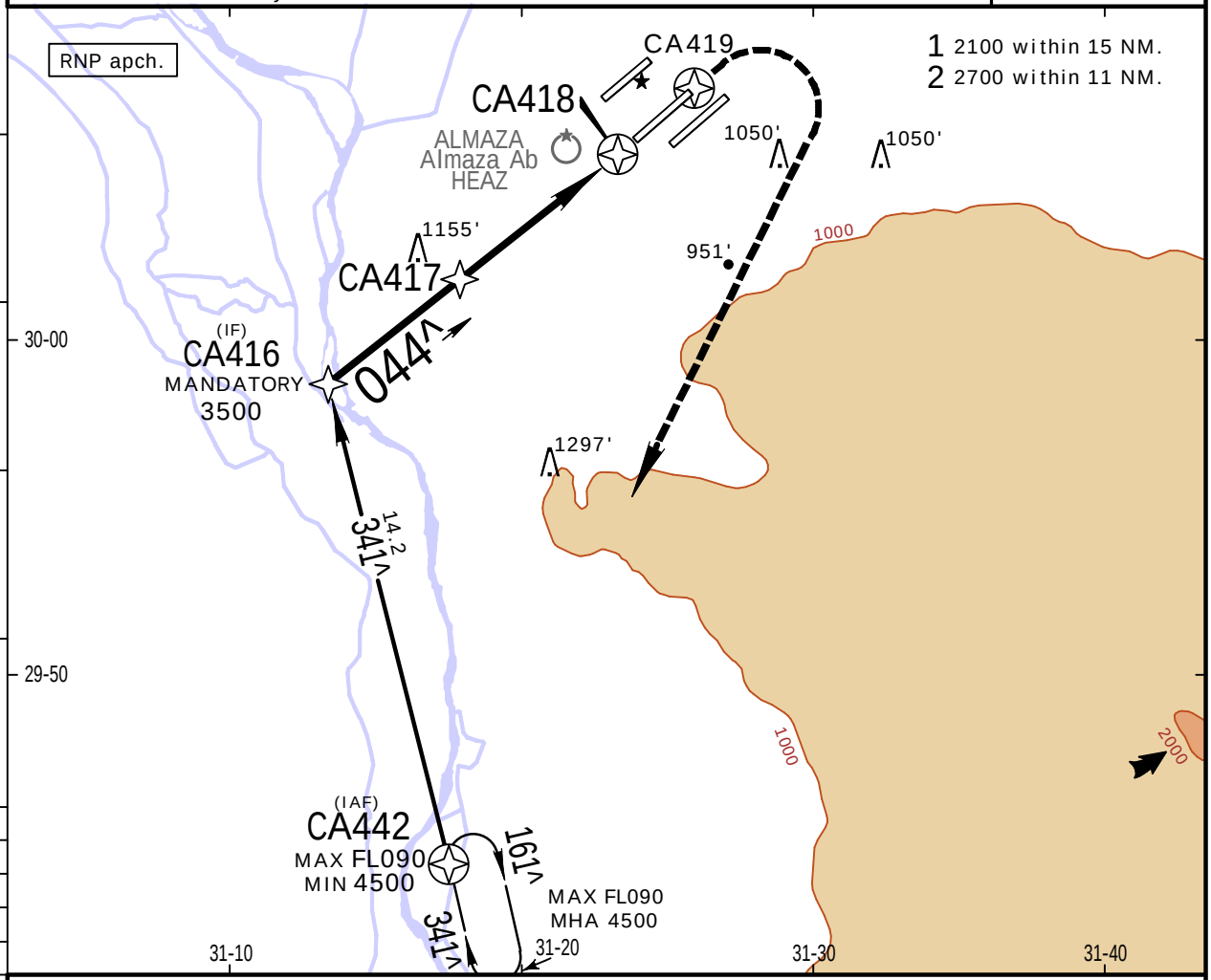

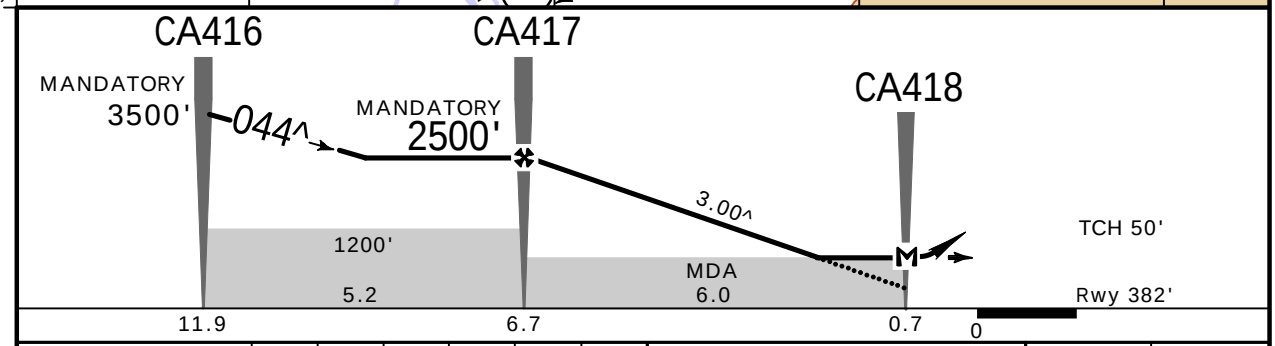

Gnd speed-Kts	70	90	100	120	140	160
Descent Angle 3.00^	372	478	531	637	743	849
MAP at CA418						

HIALS-II PAPI PAPI

CA419

.State.

STRAIGHT-IN LANDING
LNAV
MDA(H) 710' (328')

		ALS out
PANS OPS A	R1000m	R1500m
B		
C		
D		

CHANGES: MSA, HE(P)-2 and HE(R)-17 airspaces withdrawn, procedure.

| JEPPESEN, 2006, 2023. ALL RIGHTS RESERVED.

Printed from JeppView for Windows 5.3.0.0 on 07 Jan 2024; Terminal chart data cycle 01-2024; Notice: After 18 Jan 2024, 0000Z, this chart may no longer be valid

HECA/CAI
CAIRO INTL

JEPPESEN

4 AUG 23 (12-3) .Eff.10.Aug.

CAIRO, EGYPT
RNP Rwy 05R

BRIEFING STRIP ™

D-ATIS	CAIRO Approach (R)	CAIRO Tower	Ground South	Ground North
122.6	119.050	118.1	120.4	121.9

RNAV	Final Apch Crs	CA453 MANDATORY	MDA(H)	Apt Elev 467'
	044^	2500' (2052')	820' (372')	Rwy 448'

MISSED APCH: Climb STRAIGHT AHEAD to cross CA456, then turn RIGHT to reach CA442 at 4500' and hold or as directed.

Alt Set: hPa | Rwy Elev: 16 hPa | Trans level: FL060 | Trans alt: 4500'

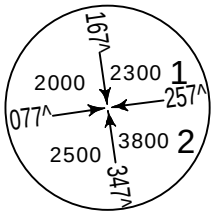

MSA ARP

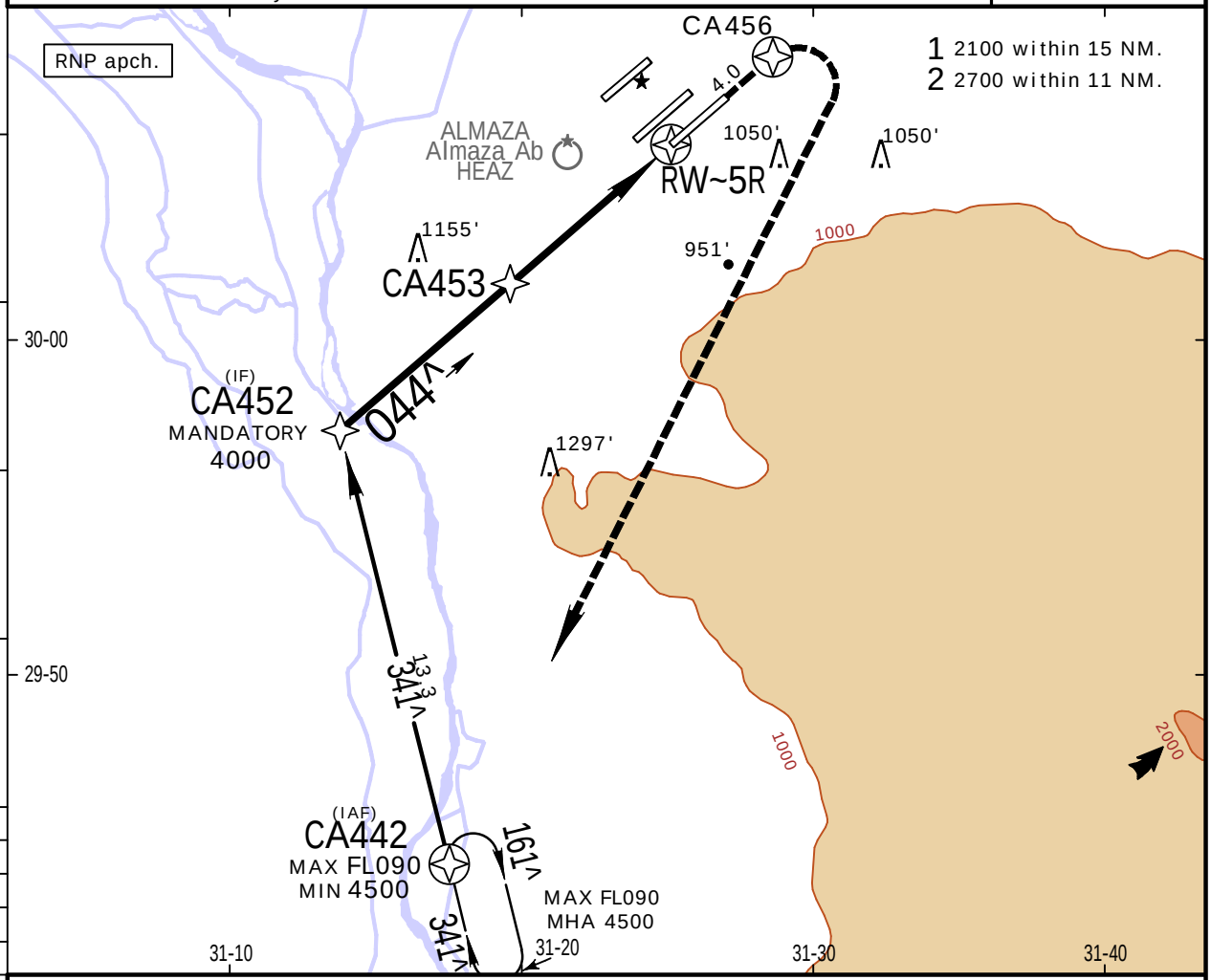

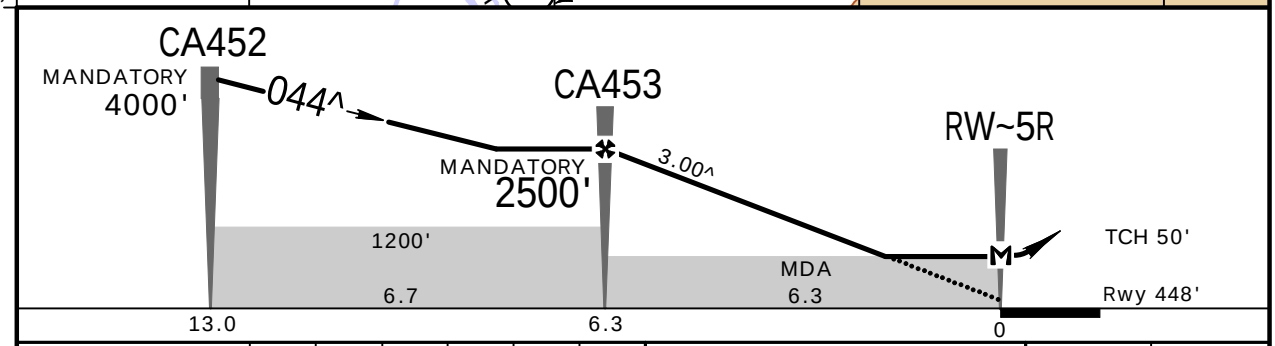

Gnd speed-Kts	70	90	100	120	140	160
Descent Angle 3.00^	372	478	531	637	743	849
MAP at RW~5R						

HIALS-II PAPI PAPI

CA456

.State.

STRAIGHT-IN LANDING
LNAV
MDA(H) 820' (372')

PANS OPS

		ALS out
A	R1000m	R1700m
B		
C		
D		

CHANGES: MSA, HE(P)-2 and HE(R)-17 airspaces withdrawn, note, altitude.

| JEPPESEN, 2017, 2023. ALL RIGHTS RESERVED.

Printed from JeppView for Windows 5.3.0.0 on 07 Jan 2024; Terminal chart data cycle 01-2024; Notice: After 18 Jan 2024, 0000Z, this chart may no longer be valid

HECA/CAI
CAIRO INTL

JEPPESEN

4 AUG 23 (12-4) .Eff.10.Aug.

CAIRO, EGYPT
RNP Rwy 23L

BRIEFING STRIP ™

D-ATIS	CAIRO Approach (R)	CAIRO Tower	Ground South	Ground North
122.6	119.050	118.1	120.4	121.9

RNAV	Final Apch Crs	CA474 MANDATORY	MDA(H)	Apt Elev 467'
	224^	2100' (1633')	830' (363')	Rwy 467'

MISSED APCH: Climb STRAIGHT AHEAD to CA475, then turn LEFT to CA476, then turn LEFT to CA428 at FL060 and hold or as directed.

Alt Set: hPa | Rwy Elev: 17 hPa | Trans level: FL060 | Trans alt: 4500'

MSA ARP: 2000 (077^), 2300 (257^) 1; 2500 (347^), 3800 (167^) 2

1 2100 within 15 NM.
2 2700 within 11 NM.

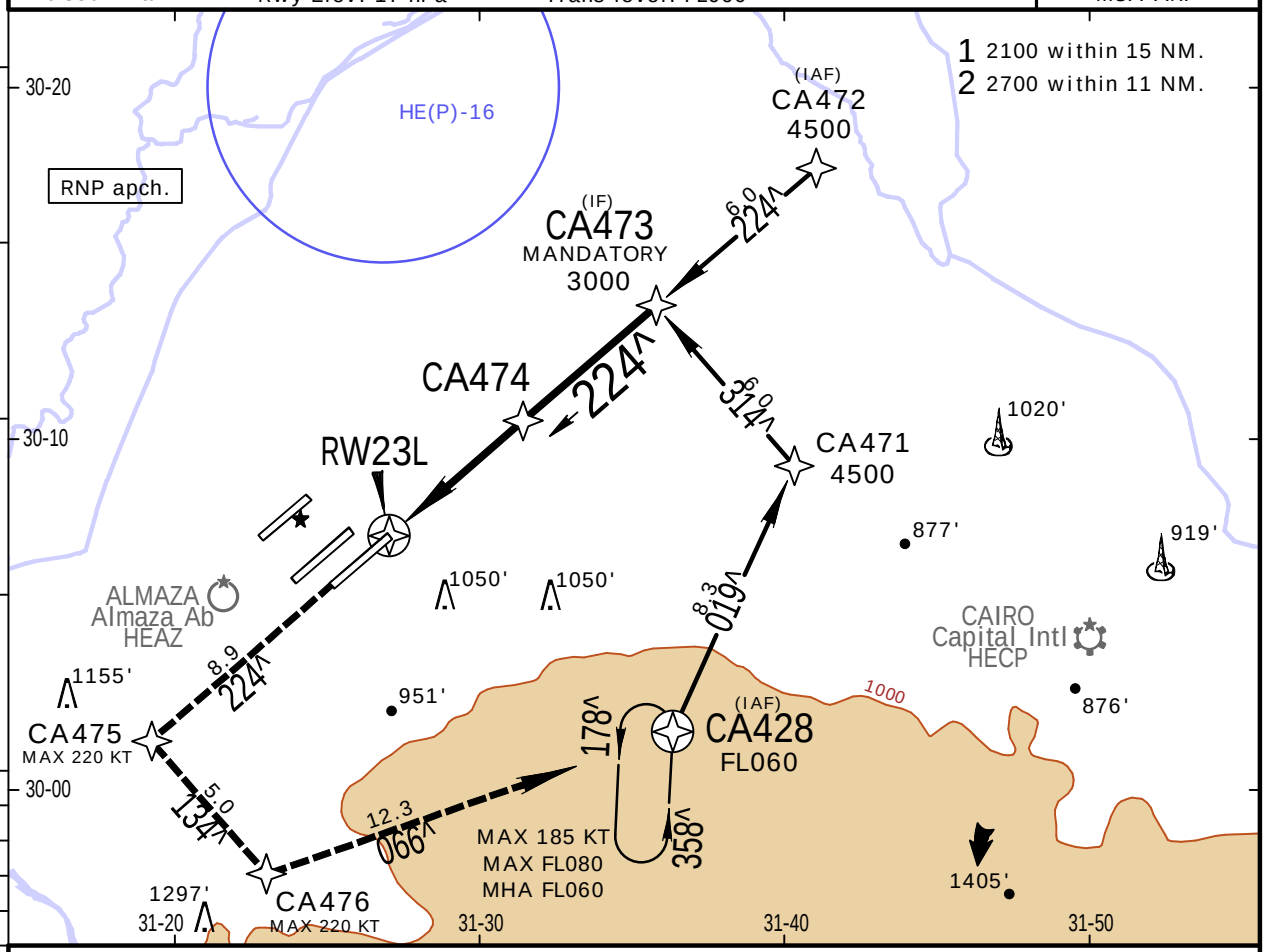

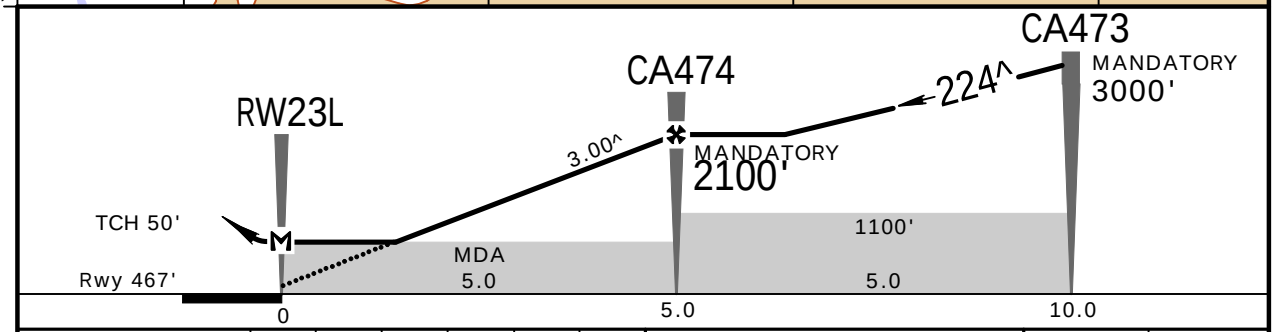

Gnd speed-Kts	70	90	100	120	140	160
Descent Angle 3.00^	372	478	531	637	743	849
MAP at RW23L						

HIALS-II
PAPI PAPI

CA475

.State.

STRAIGHT-IN LANDING
LNAV
MDA(H) 830' (363')

PANS OPS		ALS out
A	R1000m	R1700m
B		
C		
D		

CHANGES: MSA, note.

| JEPPESEN, 2017, 2023. ALL RIGHTS RESERVED.

Printed from JeppView for Windows 5.3.0.0 on 07 Jan 2024; Terminal chart data cycle 01-2024; Notice: After 18 Jan 2024, 0000Z, this chart may no longer be valid

HECA/CAI
CAIRO INTL

JEPPESEN

4 AUG 23 (12-5) .Eff.10.Aug.

CAIRO, EGYPT
RNP Rwy 23C

BRIEFING STRIP ™

D-ATIS	CAIRO Approach (R)	CAIRO Tower	Ground South	Ground North
122.6	119.050	118.1	120.4	121.9

RNAV	Final Apch Crs	CA424 MANDATORY	MDA(H)	Apt Elev 467'
	224^	2500' (2125')	810' (435')	Rwy 375'

MISSED APCH: Climb STRAIGHT AHEAD to cross CA418, then turn LEFT to reach CA428 at FL060 and hold or as directed.

Alt Set: hPa | Rwy Elev: 14 hPa | Trans level: FL060 | Trans alt: 4500'

MSA ARP: 1 2000 (167^, 2300, 257^); 2 2500 (077^, 3800, 347^)

1 2100 within 15 NM.
2 2700 within 11 NM.

RNP apch.

HE(P)-16

(IF) CA423 MANDATORY 3200

(IAF) CA422 FL060 MAX 230 KT

9.5 247^

CA424 MANDATORY 2500

5.0 247^

224^

358^

CA426

CA418

ALMAZA Almaza Ab HEAZ

CAIRO Capital Intl HECP

1020' 877' 919' 1050' 1050' 1155' 951' 876' 1405' 1297'

1000

12.0

(IAF) CA428 FL060 MAX 230 KT

178^ 358^

MAX 185 KT
MAX FL080
MHA FL060

30-20 30-10 30-00

31-20 31-30 31-40 31-50

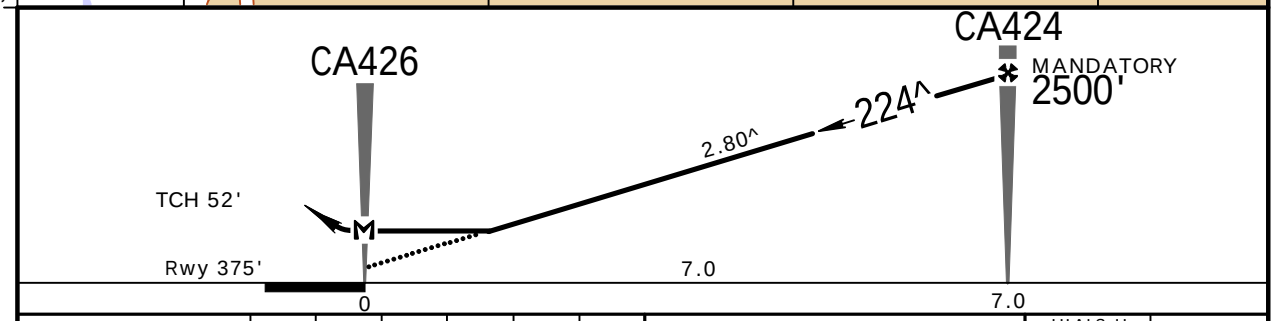

Gnd speed-Kts	70	90	100	120	140	160
Descent Angle 2.80^	347	446	495	594	693	792
MAP at CA426						

HIALS-II PAPI PAPI

CA418

.State.

STRAIGHT-IN LANDING
LNAV
MDA(H) 810' (435')

PANS OPS		ALS out
A	R1600m	R2000m
B		
C		
D		

CHANGES: MSA, note.

| JEPPESEN, 2006, 2023. ALL RIGHTS RESERVED.

Printed from JeppView for Windows 5.3.0.0 on 07 Jan 2024; Terminal chart data cycle 01-2024; Notice: After 18 Jan 2024, 0000Z, this chart may no longer be valid

HECA/CAI
CAIRO INTL

JEPPESEN

4 AUG 23 (12-6) .Eff.10.Aug.

CAIRO, EGYPT
RNP Rwy 23R

BRIEFING STRIP ™

D-ATIS	CAIRO Approach (R)	CAIRO Tower	Ground South	Ground North
122.6	119.050	118.1	120.4	121.9

RNAV	Final Apch Crs	CA431 MANDATORY	MDA(H)	Apt Elev 467'
	224^	2500' (2301')	830' (631')	Rwy 199'

MISSED APCH: Climb immediate RIGHT turn on 279^ to CA518 at 2000' or above, then turn RIGHT to CA519 at 2800' or above, then turn RIGHT to CA52~ at 4000', then to CA428 at FL060 and hold or as directed. MAX 185 KT.

Alt Set: hPa | Rwy Elev: 7 hPa | Trans level: FL060 | Trans alt: 4500'

MSA ARP: 1 (167^, 2000, 2300, 257^, 077^) 2 (2500, 3800, 347^)

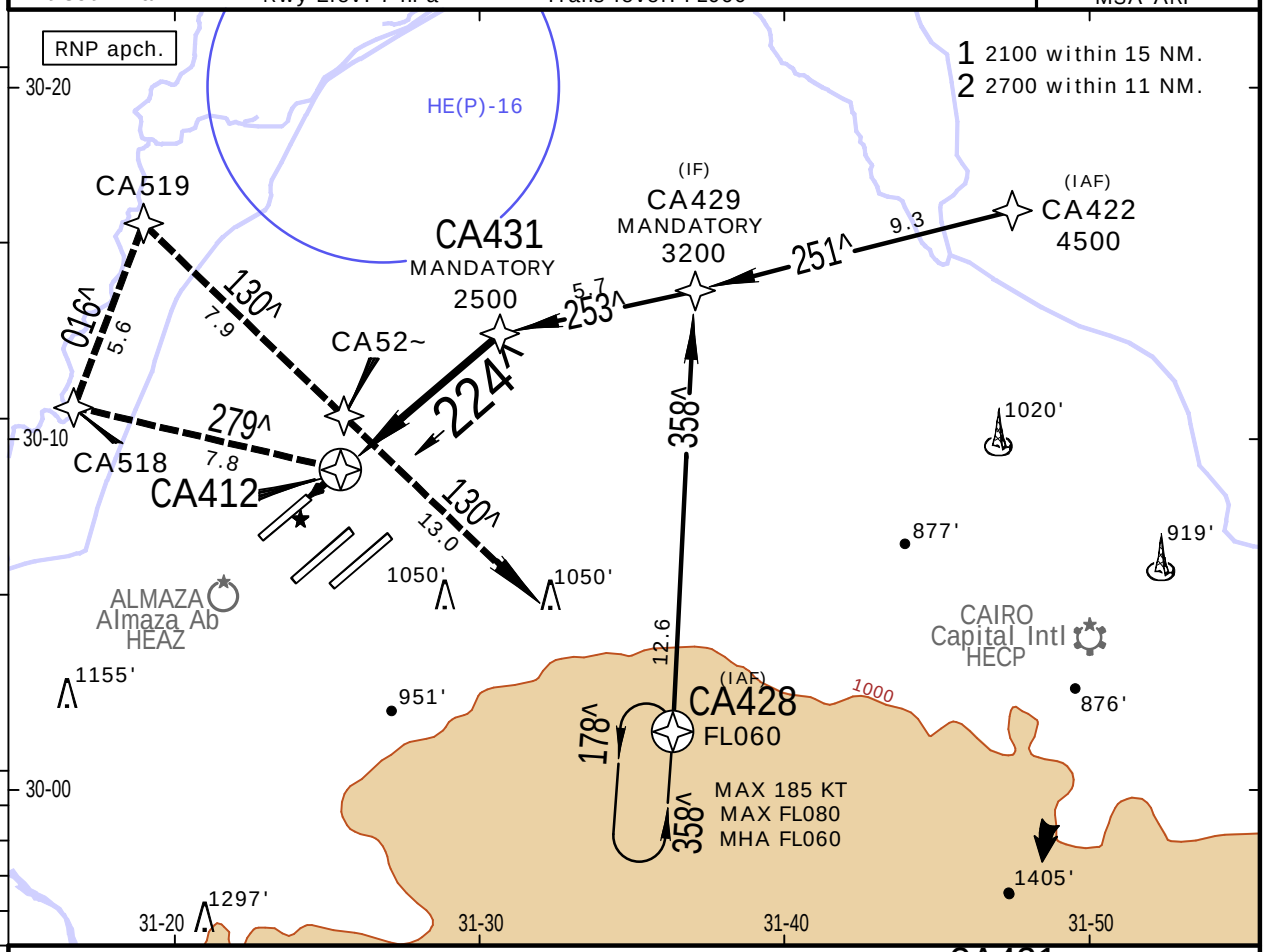

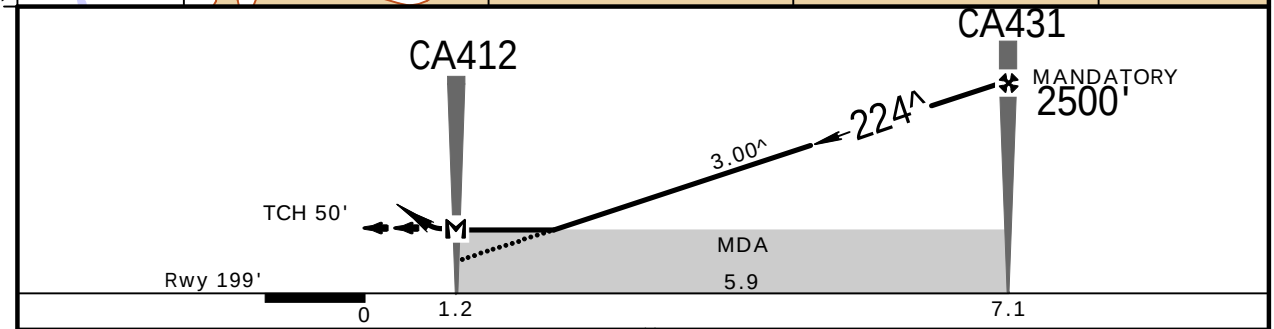

Gnd speed-Kts	70	90	100	120	140	160
Descent Angle 3.00^	372	478	531	637	743	849
MAP at CA412						

HIALS PAPI PAPI | 185 KT MAX | at or above 2000' on RT | 279^ | CA518

.State.

STRAIGHT-IN LANDING

LNAV

MDA(H) 830' (631')

PANS OPS		ALS out
A	R2700m	R2900m
B		
C		
D		

CHANGES: MSA, note.

| JEPPESEN, 2006, 2023. ALL RIGHTS RESERVED.

Printed from JeppView for Windows 5.3.0.0 on 07 Jan 2024; Terminal chart data cycle 01-2024; Notice: After 18 Jan 2024, 0000Z, this chart may no longer be valid

HECA/CAI
CAIRO INTL

JEPPESEN
4 AUG 23 (13-1) .Eff.10.Aug.

CAIRO, EGYPT
VOR Rwy 05L

BRIEFING STRIP ™

D-ATIS	CAIRO Approach (R)	CAIRO Tower	Ground South	Ground North
122.6	119.050	118.1	120.4	121.9

VOR CAI	Final Apch Crs	D10.0	MDA(H)	Apt Elev 467'
112.5	044^	2500' (2310')	760' (570')	Rwy 190'

MISSED APCH: Turn LEFT onto 319^ climbing to 2500', then turn RIGHT to VOR and hold at 4000', or as directed.

Alt Set: hPa | Rwy Elev: 7 hPa | Trans level: FL060 | Trans alt: 4500'

MSA ARP: 2000, 2300 (1), 2500, 3800 (2); 167^, 257^, 077^, 347^

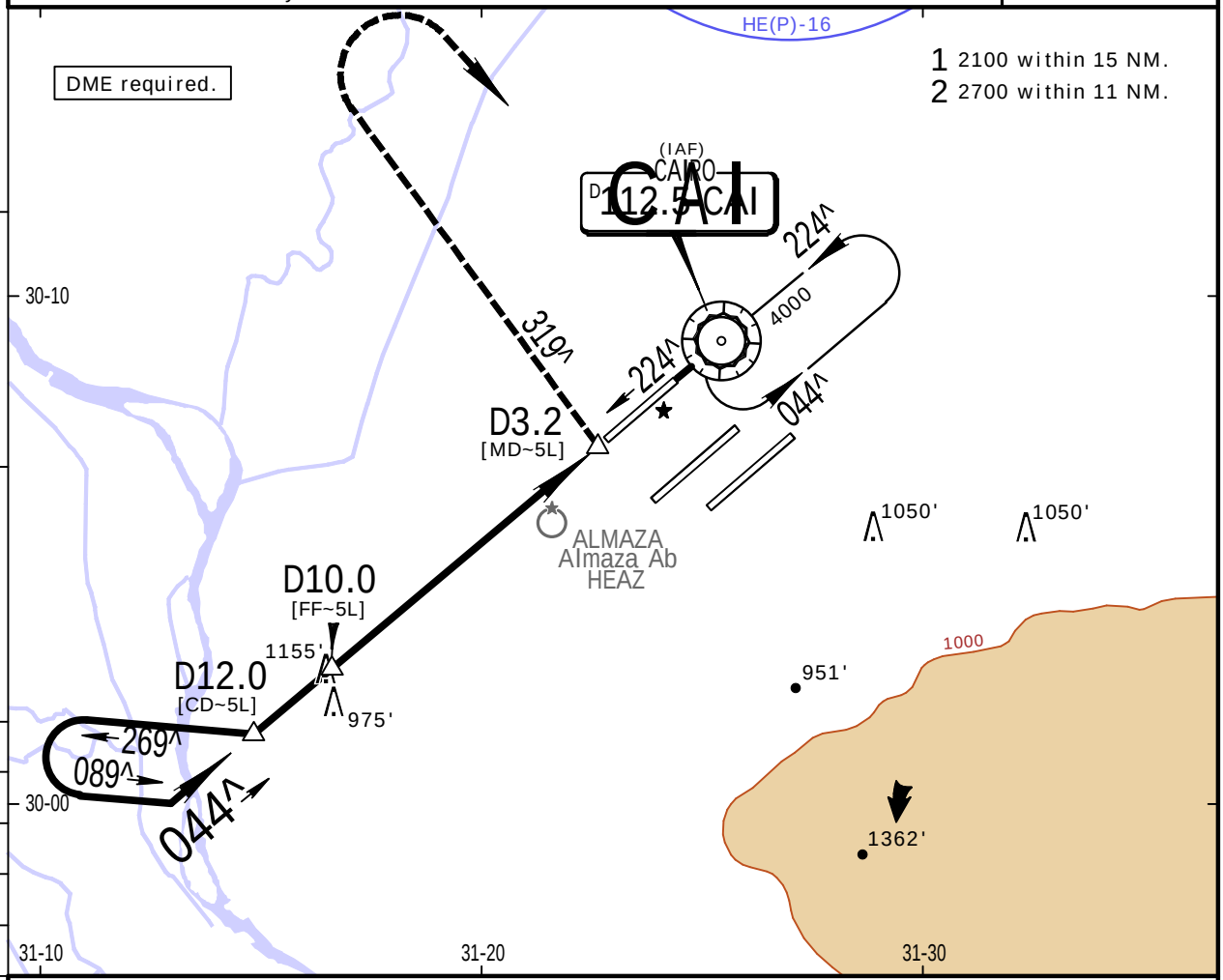

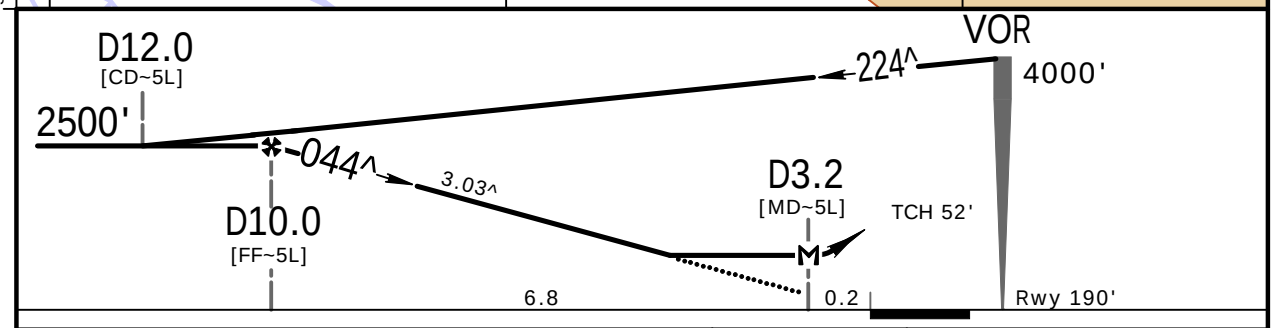

Gnd speed-Kts		70	90	100	120	140	160
Descent Angle	3.03^	375	482	536	643	750	858
MAP at D3.2							

HIALS
PAPI PAPI

2500' onto 319^
LT

.State.

STRAIGHT-IN LANDING

MDA(H) 760' (570')

PANS OPS

		ALS out
A	R1900m	R2600m
B		
C		
D		

CHANGES: MSA, HE(P)-2 airspace withdrawn.

| JEPPESEN, 2000, 2023. ALL RIGHTS RESERVED.

Printed from JeppView for Windows 5.3.0.0 on 07 Jan 2024; Terminal chart data cycle 01-2024; Notice: After 18 Jan 2024, 0000Z, this chart may no longer be valid

HECA/CAI
CAIRO INTL

JEPPESEN
4 AUG 23 (13-2) .Eff.10.Aug.

CAIRO, EGYPT
VOR Rwy 05C

BRIEFING STRIP ™

D-ATIS	CAIRO Approach (R)	CAIRO Tower	Ground South	Ground North
122.6	119.050	118.1	120.4	121.9

VOR CVO	Final Apch Crs	D5.8	MDA(H)	Apt Elev 467'
115.2	044^	2500' (2118')	710' (328')	Rwy 382'

MISSED APCH: Climb STRAIGHT AHEAD to 2000', then turn RIGHT climbing to reach VOR at 4500' and hold, or as directed.

Alt Set: hPa | Rwy Elev: 14 hPa | Trans level: FL060 | Trans alt: 4500'

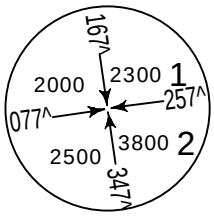

MSA ARP

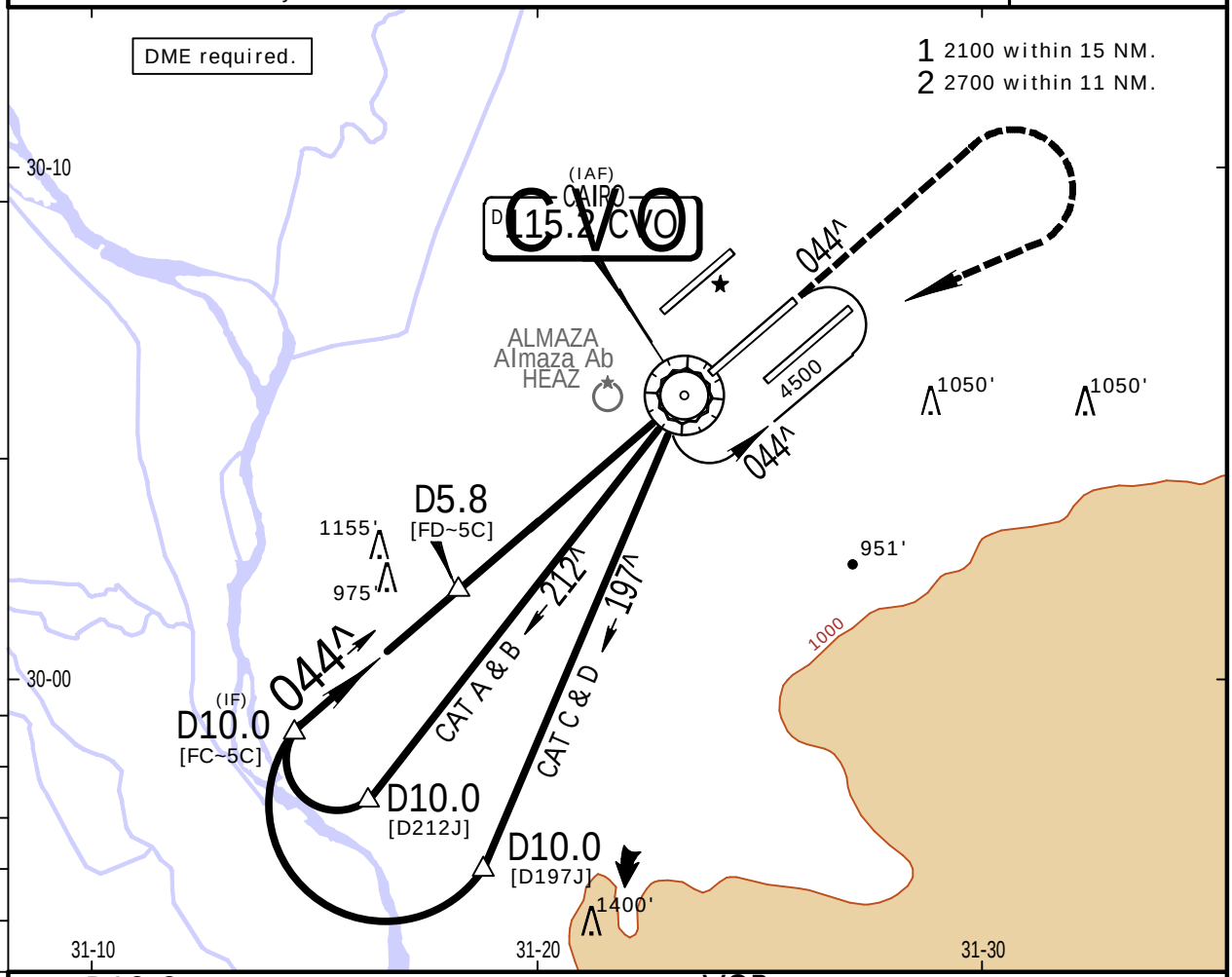

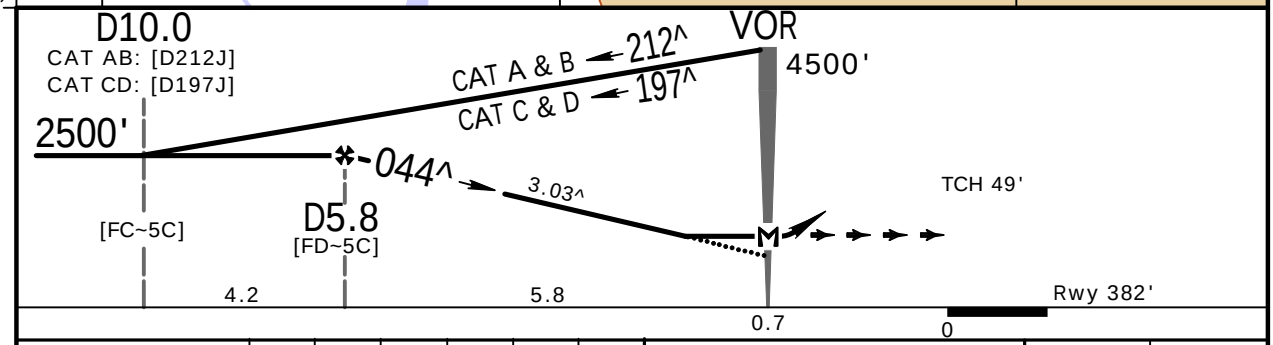

Gnd speed-Kts	70	90	100	120	140	160
Descent Angle 3.03^	375	482	536	643	750	858
MAP at VOR						

HIALS-II
PAPI PAPI
2000'

.State.

STRAIGHT-IN LANDING

MDA(H) 710' (328')

		ALS out
A	R1000m	R1500m
B		
C		
D		

PANS OPS

CHANGES: MSA, HE(P)-2 airspace withdrawn.

| JEPPESEN, 2000, 2023. ALL RIGHTS RESERVED.

Printed from JeppView for Windows 5.3.0.0 on 07 Jan 2024; Terminal chart data cycle 01-2024; Notice: After 18 Jan 2024, 0000Z, this chart may no longer be valid

HECA/CAI
CAIRO INTL

JEPPESEN

4 AUG 23 (13-3) .Eff.10.Aug.

CAIRO, EGYPT
VOR Rwy 23L

BRIEFING STRIP ™

D-ATIS	CAIRO Approach (R)	CAIRO Tower	Ground South	Ground North
122.6	119.050	118.1	120.4	121.9

VOR CVO	Final Apch Crs	D8.7	MDA(H)	Apt Elev 467'
115.2	235^	2100' (1633')	970' (503')	

MISSED APCH: Turn LEFT onto 199^ climbing at or above 2000', then turn LEFT to reach VOR at 4500' and hold, or as directed.

Alt Set: hPa | Apt Elev: 17 hPa | Trans level: FL060 | Trans alt: 4500'

MSA ARP: 167^ 2000; 2300 1; 257^; 077^; 2500; 3800 2; 347^

DME required.

1 2100 within 15 NM.
2 2700 within 11 NM.

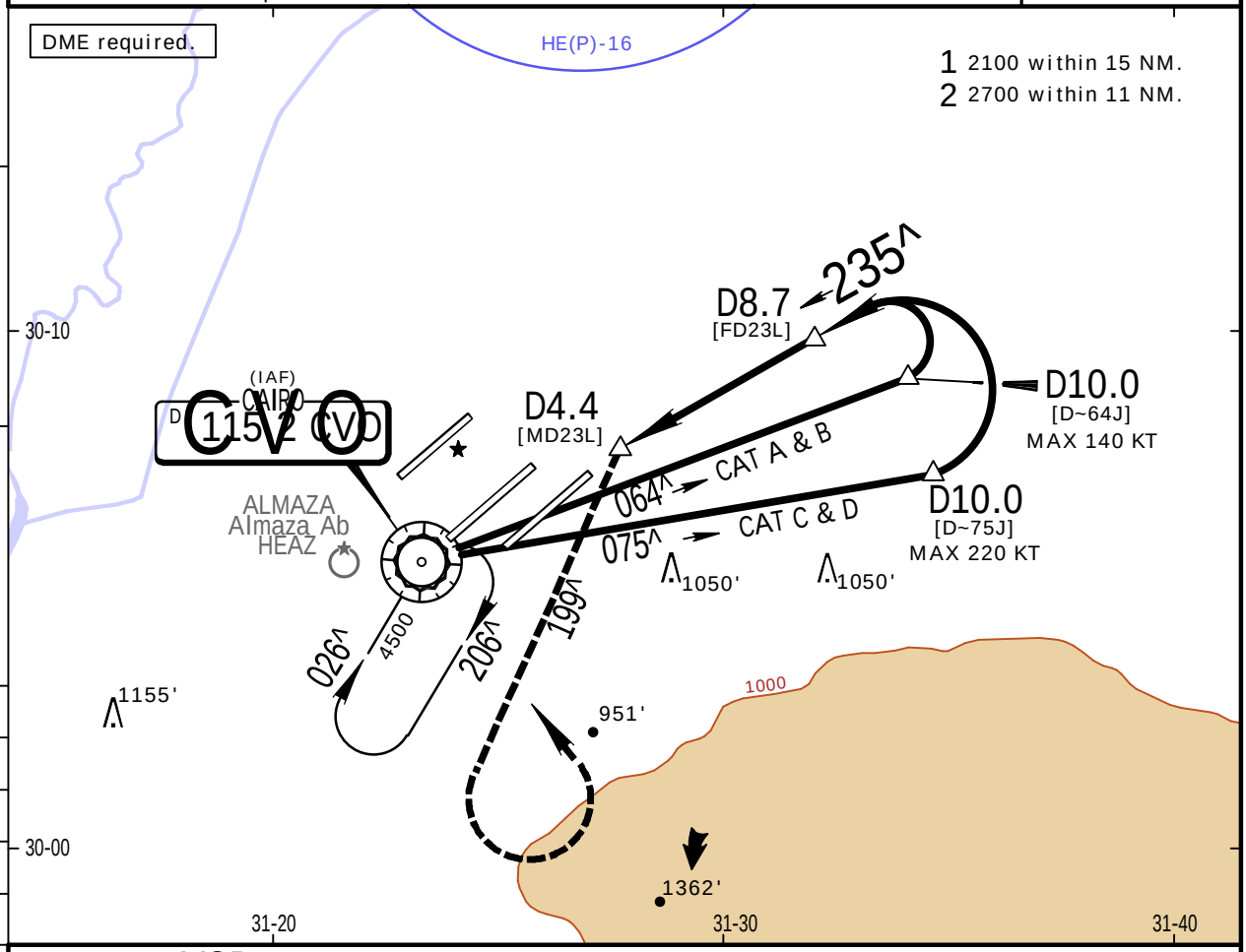

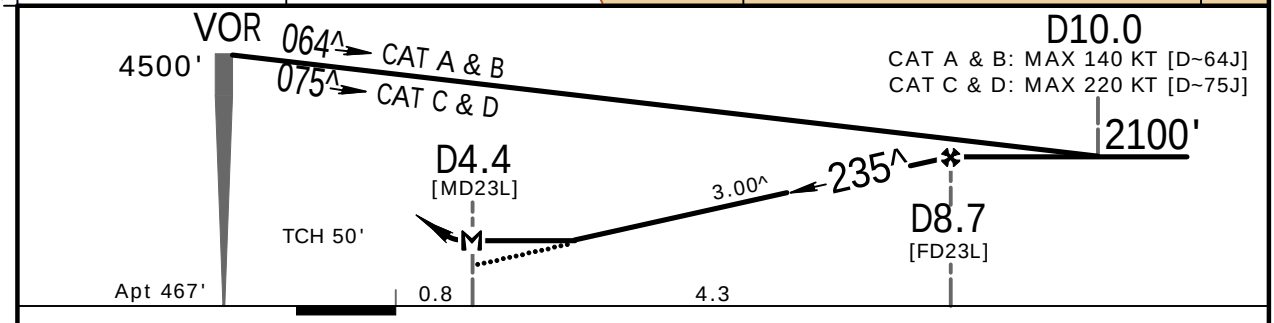

Gnd speed-Kts		70	90	100	120	140	160
Descent Angle	3.00^	372	478	531	637	743	849
MAP at D4.4							

HIALS-II PAPI PAPI

At or above 2000' onto 199^ LT

.State.

STRAIGHT-IN LANDING

MDA(H) 970' (503')

PANS OPS

		ALS out
A	R1600m	R2400m
B		
C		
D		

CHANGES: MSA.

| JEPPESEN, 2011, 2023. ALL RIGHTS RESERVED.

Printed from JeppView for Windows 5.3.0.0 on 07 Jan 2024; Terminal chart data cycle 01-2024; Notice: After 18 Jan 2024, 0000Z, this chart may no longer be valid

HECA/CAI
CAIRO INTL

JEPPESEN

4 AUG 23 (13-4) .Eff.10.Aug.

CAIRO, EGYPT
VOR Rwy 23C

BRIEFING STRIP ™

D-ATIS	CAIRO Approach (R)	CAIRO Tower	Ground South	Ground North
122.6	119.050	118.1	120.4	121.9

VOR CVO	Final Apch Crs	D7.8	MDA(H)	Apt Elev 467'
115.2	224^	2000' (1625')	760' (385')	Rwy 375'

MISSED APCH: Climb STRAIGHT AHEAD on 224^ to 2500'. Not later than D4.5 turn LEFT to reach VOR at 4500' and hold, or as directed.

Alt Set: hPa Rwy Elev: 14 hPa Trans level: FL060 Trans alt: 4500'

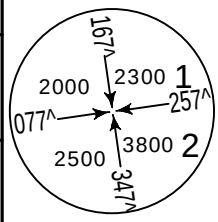

MSA ARP

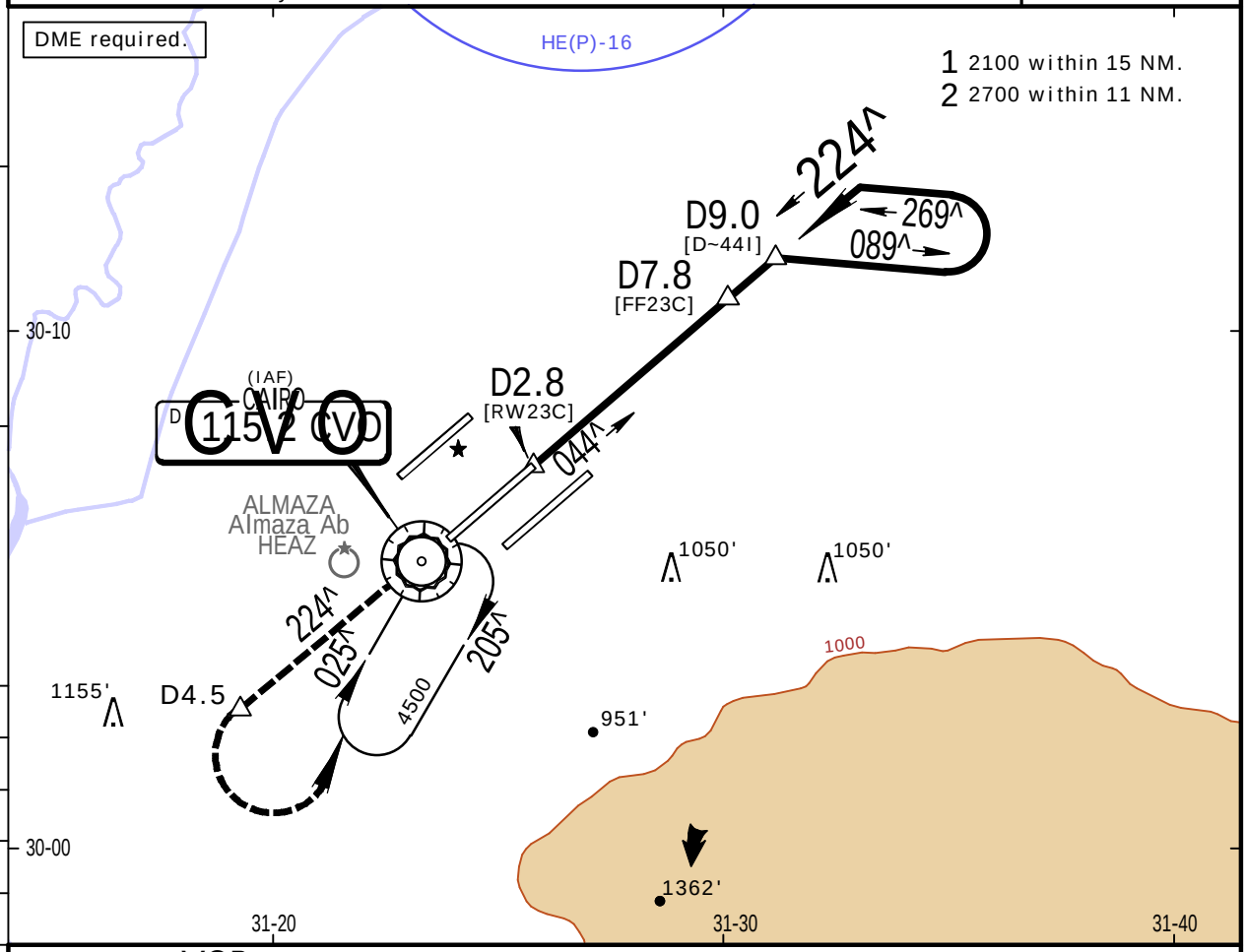

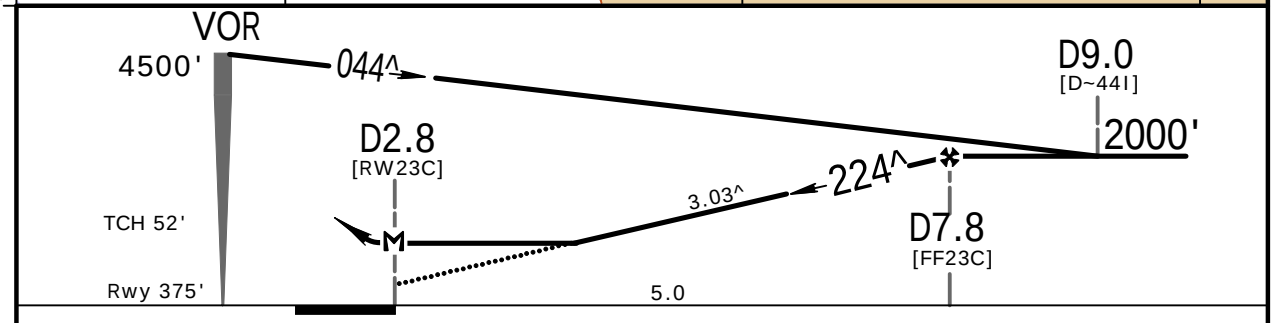

Gnd speed-Kts	70	90	100	120	140	160
Descent Angle 3.03^	375	482	536	643	750	858
MAP at D2.8						

HIALS-II PAPI PAPI

2500' whichever is earlier D4.5

.State.

STRAIGHT-IN LANDING

MDA(H) 760' (385')

		ALS out
A	R1400m	R1800m
B		
C		
D		

PANS OPS

CHANGES: MSA, MAP.

| JEPPESEN, 2005, 2023. ALL RIGHTS RESERVED.

Printed from JeppView for Windows 5.3.0.0 on 07 Jan 2024; Terminal chart data cycle 01-2024; Notice: After 18 Jan 2024, 0000Z, this chart may no longer be valid

HECA/CAI
CAIRO INTL

JEPPESEN
4 AUG 23 (13-5) .Eff.10.Aug.

CAIRO, EGYPT
VOR Rwy 23R

BRIEFING STRIP ™

D-ATIS	CAIRO Approach (R)	CAIRO Tower	Ground South	Ground North
122.6	119.050	118.1	120.4	121.9

VOR CAI	Final Apch Crs	D4.1	MDA(H)	Apt Elev 467'
112.5	224^	2000' (1801')	780' (581')	Rwy 199'

MISSED APCH: Turn RIGHT onto track 279^ climbing to 2000', then turn RIGHT to reach VOR at 3500' and hold, or as directed.
MAX 220 KT.

Alt Set: hPa | Rwy Elev: 7 hPa | Trans level: FL060 | Trans alt: 4500'

MSA ARP: 2000 (077^), 2300 (1, 257^), 2500 (3800, 2, 347^), 167^

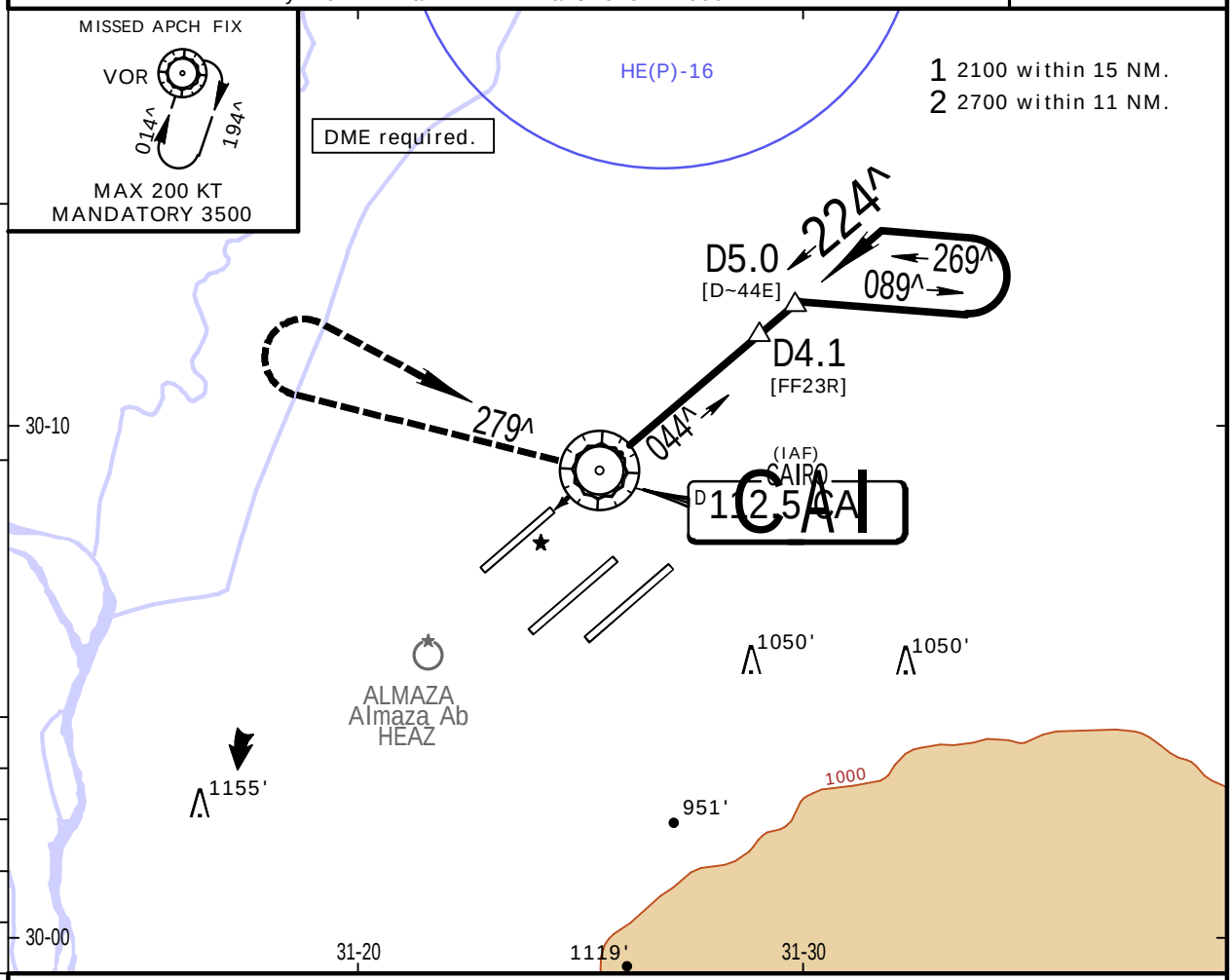

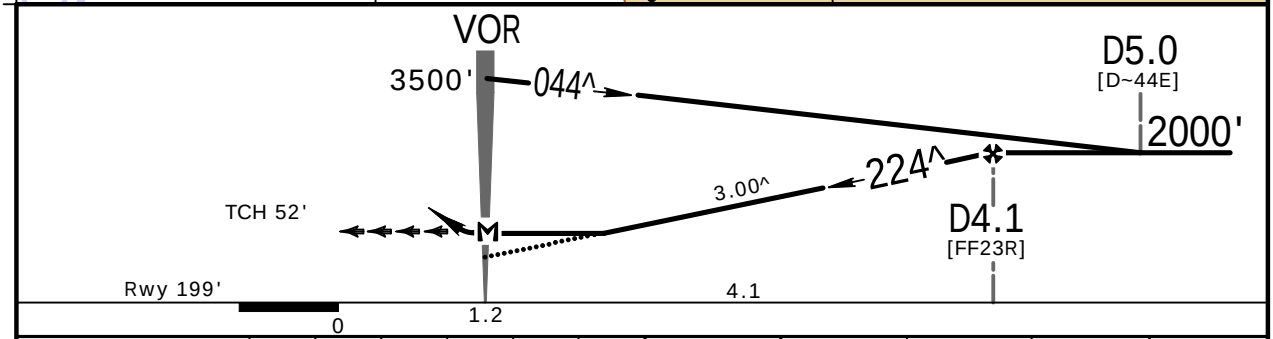

Gnd speed-Kts	70	90	100	120	140	160
Descent Angle 3.00^	372	478	531	637	743	849
MAP at VOR						

HIALS
PAPI PAPI

220 KT MAX

2000' on 279^
RT

.State.

STRAIGHT-IN LANDING

MDA(H) 780' (581')

		ALS out
A		
B		
C	R2500m	R2700m
D		

PANS OPS

CHANGES: MSA.

JEPPESEN, 2000, 2023. ALL RIGHTS RESERVED.